AMIAD WATER SYSTEMS Ltd.

3” Spin Klin™ Battery

External Source

Automatic back-flush

Serial number:	_____
Order number:	_____
Catalog number:	_____
Filtration degree:	_____
Tested by:	_____

Installation and Operation Instructions

910101-000929/ 08.2022

AMIAD WATER SYSTEMS Ltd.
3” Spin Klin Battery - External Source - Automatic back-flush

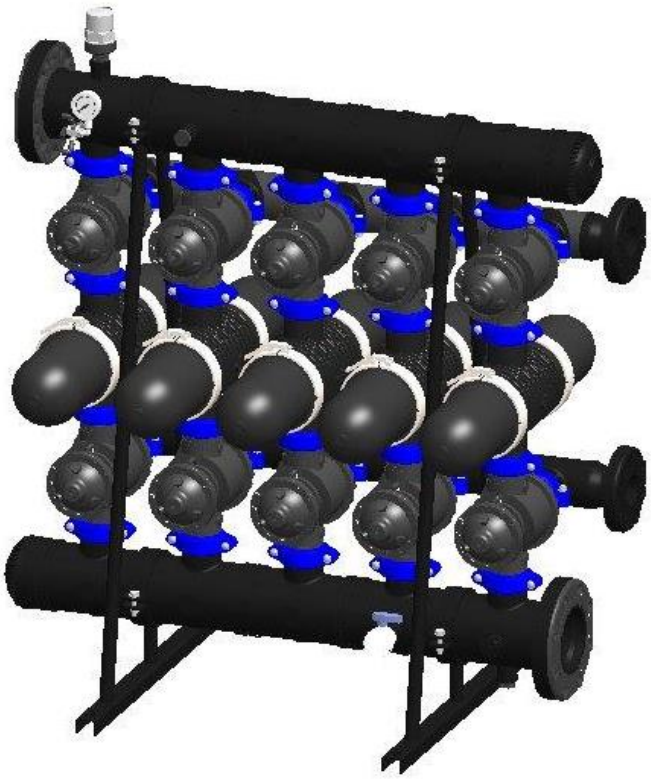

Image is for illustration only

Disclaimer:

Copyright © 2017 Amiad Water Systems Ltd. All rights reserved.

The contents of this document, including without limitation all information and materials, images, illustrations, data, drawings, names and any other such materials that appear in this document are the sole property of Amiad Water Systems Ltd., including any intellectual property rights, whether registered or not, and all know-how contained or embodied therein. Amiad may alter, remove or change the Content without any further notice. You may not reproduce, copy, modify, create derivative works from, sell or participate in any sale of, or exploit in any way, in whole or in part, any of this document or its content.
The confidential nature of and/or privilege in the file enclosed is not waived or lost as a result of a mistake or error in this file. If you received this file in error, please notify Amiad immediately at info@amiad.com.
This document does not replace any certified drawing, procedure or information provided by Amiad in reference to a specific customer, site or project.

Amiad assumes that all users understand risks involved within this file and/or its attached materials. This document is given in good faith and is not intended to impose any obligation to Amiad. While every effort has been made to ensure the information in this manual is accurate and complete, we would appreciate if you can bring any errors or omissions to the knowledge of Amiad or consult Amiad experts or its authorized representatives if you have any questions.
Amiad Water Systems Ltd. D.N. Galil Elyon 1, 1233500, Israel Tel: 972 4 690 9500 | Fax: 972 4 814 1159 Email: info@amiad.com

Table of Contents

1. INTRODUCTION 4

2. SAFETY INSTRUCTIONS 4

General Safety Instructions 4

Installation 4

Commissioning 6

Operation and Control 6

3. STANDARD SYSTEM DIMENSIONS 7

4. DESCRIPTION & OPERATION 8

5. DESCRIPTION AND FILTER OPERATION 12

6. TECHNICAL DATA 13

7. INSTALLATION AND OPERATION 14

8. SPIN KLIN SYSTEM MAINTENANCE 17

9. TROUBLESHOOTING 21

10. FILTER PARTS SCHEDULE AND PARTS LIST 22

10.1 FILTER PARTS SCHEDULE AND PARTS LIST - DRINKING WATER CONFIGURATION 23

11. VALVES - PARTS SCHEDULE AND PARTS LIST 24

11.1 STANDARD VALVES PARTS LIST 25

11.2 AW VALVES PARTS LIST 26

11.3 SW VALVES PARTS LIST 27

11.4 DRINKING WATER VALVES PARTS LIST 28

12. SYSTEM DRAWINGS (to be amended per each specific ordered) 29

13. AMIAD LIMITED WARRANTY 30

1. INTRODUCTION

General

Amiad Water Systems congratulates you for purchasing the 3" Spin Klin battery with external source back-flushing. These filters are easy to install, use and service; they require no special skills to operate.

For operation and maintenance of this filter, please follow the instructions in this manual.

This 3” Spin Klin battery is an automatic self-cleaning filter battery designed for non-hazardous liquids only and for operation within the pressure framework specifications.

2. SAFETY INSTRUCTIONS

General Safety Instructions

- The manufacturer filtration products always operate as components in a larger system. It is essential for the system designers, installers and operators to comply with all the relevant safety standards.
- Prior to installation, operation, maintenance or any other type of action carried out on the filter, read carefully the installation and operation instructions.
- During installation, operation or maintenance of the filter all conventional safety instructions should be observed to avoid danger to the workers, the public or to property in the vicinity.
- The system must be used for non-hazardous liquids only!
- Please note: The filter enters into a flushing mode automatically, without any early warning.
- No change or modification to the equipment is permitted without a written notification given by the manufacturer or by its representative, on the manufacturer’s behalf.
- Always observe standard safety instructions and good engineering practices whilst working in the filter’s vicinity.
- Use the filter only for its intended use as designed by the manufacturer, any misuse of the filter may lead to undesired damage and may affect your warranty coverage. Please consult with the manufacturer prior to any non-regular use of this equipment.
- System's cleaning and maintenance shall be carried out only when explosive atmosphere is not present!

Installation

General

- Install the filter according to the detailed Installation Instructions provided with the filter by the manufacturer and according to the description given in this manual.
- Make sure to leave enough clearance, side and top, to enable easy access for future treatments and safe maintenance operations.
- The user should arrange suitable lighting at the area of the filter to enable good visibility and safe maintenance.
- The user should arrange suitable platforms and safety barriers to enable easy and safe access to the filter without climbing on pipes and other equipment. The user should verify that any platform, barrier, ladder or other such equipment is built, installed and used in accordance with the relevant local authorized standards.
- Check and re-tighten all bolts during commissioning and after the first week of operation.
- Use only appropriate standard tools and equipment operated by qualified operators when installing, operating and maintaining the filter.
- When installation is required in hazardous environment sites, underground or high above ground, make sure that the site design and the auxiliary equipment are appropriate and that installation procedures are carried out in accordance with the relevant standards and regulations.
- Ensure walking areas about the installation are slip free when wet.

Shipment and transporting

- Shipping and transporting the filter must be done in a safe and stable manner and in accordance with the relevant standards and regulations.
- For shipping, lifting and positioning the filter, use only approved lifting equipment and authorized employees and contractors.

Electricity

- Electric wiring should be performed by an authorized electrician only, using standardized and approved components.
- The system must be installed with suitable electrical earthing that would prevent any electrostatic discharge from the system.
- Install a **lockable** main power cut-off switch close to the control panel.
- If due to site constraints, the control panel is installed without a clear line-of sight of the filter, an additional **lockable** power disconnect cut-off switch should be installed near each filter unit.
- Installation of the filter should be performed to avoid direct water splashing on the electrical components or on the control panel.

Pneumatics

- Install a **lockable** main cut-off switch, **featured with a pressure release mechanism,** on the compressed air supply line close to the control panel.
- If the control panel is installed far away and there is no eye contact with the filter, a **lockable** compressed air cut-off switch, **featured with a pressure release mechanism,** should be installed near each filter unit.
- The user should make sure that the compressed air supplied to the filter never exceeds the maximum designated pressure for this filter. An air-pressure reduction valve should be installed on the compressed air supply line upstream of the filter's pneumatic inlet port.

Hydraulics

- Extra safety devices should be installed on hot water applications to avoid skin burn danger.
- The user should install a manual Water Cut-off Valve next to the filter's inlet and outlet ports.
- In cases where the downstream piping network downstream of the filter is pressurized an additional manual Water Cut-off Valve should be installed next to the filter outlet port.
- The user should make sure that the system includes a Pressure Release / Drainage Valve to enable release of residual pressure prior to any maintenance procedure performed on the filter.
- The user should make sure that the filter is never exposed to water pressure exceeding the maximum designated pressure for this filter, if needed a Pressure Reduction Valve should be installed upstream of the filter's water inlet port.
- Please note that the maximum working pressure indicated at the filter's specifications table includes the pressure caused by fluid hammer and pressure surge effects.
- it is forbidden to perform any work on the filter before verifying that all pressure has been released from the system

Civil Engineering

- Make sure that the filter installation is done by the manufacturer-qualified technicians.
- Make sure that any civil engineering work at the installation site such as construction, lifting, welding, etc. is done by qualified workers / technicians / contractors and in accordance with the relevant local standards.
- While using lifting equipment, make sure that the filter or the lifted part is chained securely and in a safe manner.
- Do not leave lifted equipment if there is no necessity. Avoid working below lifted equipment.
- Wear a safety helmet while using lifting equipment.
- Make sure that the flooring is sloped for drainage and to avoid accumulation of liquids.

Commissioning

- Read carefully the Commissioning and the First Start-up Operation instructions prior to any attempt to operate the filter.
- To achieve maximum performance and smooth operation of the filter it is crucial to perform the startup and first operation procedures exactly as described in this manual.
- Commissioning the filter should be done by a technician authorized the manufacturer; do not attempt to commission the filter unaccompanied as this may lead to undesired damage and may affect your warranty coverage.

Operation and Control

- Do not operate the filter before carefully reading and being familiar with its operation instructions.
- Observe the safety stickers on the filter and never perform any operation contradicting the instructions given.
- Never operate or use the filter for purposes other than its original design and operational envelope.
- The system must be used for non-hazardous liquids only!
- System's cleaning and maintenance shall be carried out only when explosive atmosphere is not present!

Before any maintenance or non-regular operation

- Servicing the filter should be done only by technicians authorized by the manufacturer.
- System's cleaning and maintenance shall be carried out only when explosive atmosphere is not present!
- Disconnect the filter from the power supply and lock the Main Power Switch.
- Disconnect the compressed air supply, release the residual pressure and lock the Pneumatics Main Valve.
- Disconnect the filter from the water system by closing and securing the manual inlet and outlet valves. In cases where the downstream piping network is pressurized, close and secure the manual outlet valve also.
- Release the residual water pressure by opening the pressure release / drainage valve.
- Empty the filter by opening the drainage valve.
- In hot water systems wait till the filter components cool off to a safe temperature.
- Place warning signs around the work area, as required by the local standards and procedures.
- Inspect the filter’s safety stickers and replace any damaged or faded stickers.

Special Note

Before opening the filter lock, check that there is no pressure in the filter.

3. STANDARD SYSTEM DIMENSIONS

- **Drawing is for illustration only**

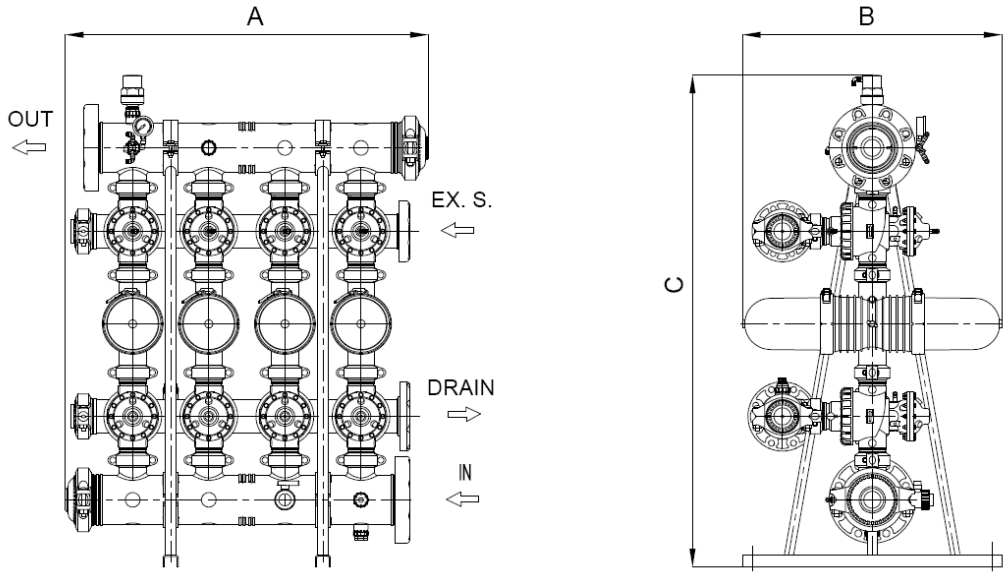

Description	Length		Height		Width	
	mm	inches	mm	inches	mm	inches
2-unit battery	824	32.4	1613	63.5	660	26.0
3-unit battery	824	32.4	1613	63.5	660	26.0
4-unit battery	1,074	42.3	1613	63.5	660	26.0
5-unit battery	1,650	65.0	1613	63.5	660	26.0
6-unit battery	1,650	65.0	1613	63.5	660	26.0
7-unit battery	2,470	97.2	1613	63.5	741	29.2
8-unit battery	2,718	107.0	1613	63.5	741	29.2

4. DESCRIPTION & OPERATION

Disc Filtration Technology

Amiad Water Systems uses a specially designed disc filtration technology. Thin, color-coded polypropylene/ nylon discs are diagonally grooved on both sides to a specific micron size. A series of these discs are then stacked and compressed on a specially designed spine. When stacked, the groove on top runs opposite to the groove below, creating a filtration element with a statistically significant series of valleys and traps for solids. The stack is enclosed in corrosion and pressure resistant housing.

During the filtration process, the filtration discs are tightly compressed together by a spring power and differential pressure, thus providing high filtration efficiency. Filtration occurs while water is percolation from the outer diameter to the inner diameter of the element. Depending on the micron rating, there are from 18 (in 400 micron discs) to 32 (in 20 micron discs) stopping points in each track, thus creating the unique in-depth filtration.

Table of Filtration Grades of the Discs and Color Code

Color Code	Light Blue	Gray	Purple	Green	Brown	Black	Red	Yellow	Blue
Micron	10	20	40	55	70	100	130	200	400
PP / PA (Nylon)	PP	PP, PA	PP, PA	PP, PA	PP, PA	PP, PA	PP, PA	PP, PA	PP

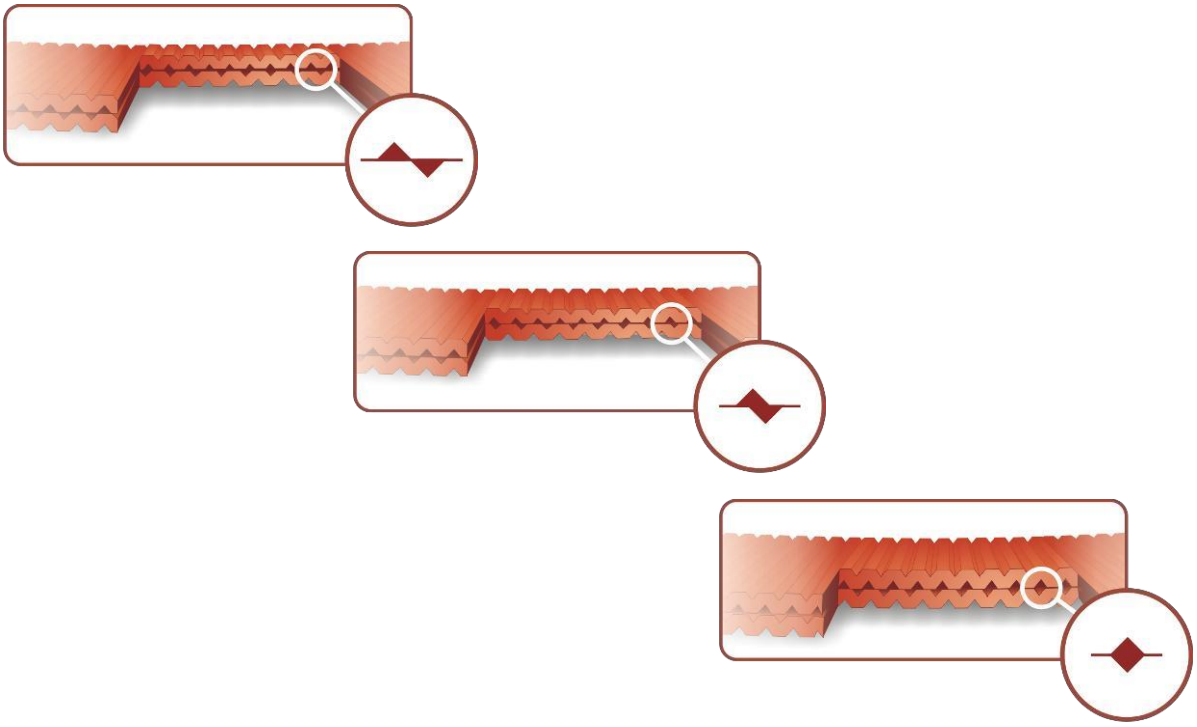

Spin Klin™ Technology

Spin Klin Spine - The Core of the Spin Klin Filtration System

The Spin Klin® discs are stacked on the Spin Klin® spine. The discs are color-coded according to micron size and are assembled to suit the water filtration requirements. The spine assembly has a spring compression unit and an internal piston, which operate during alternate filtration or back-flush modes. Inside the housing the spring and the pressure difference compress the discs tightly during the filtration process, forcing the water to flow between the grooves and trap the solids.

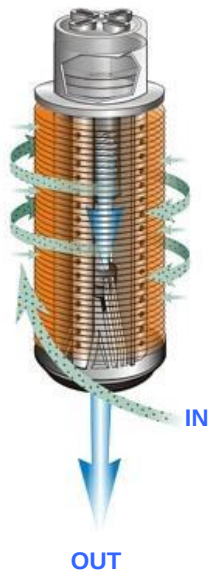

Spin Klin™ Automatic Back-flush Operation

Activated by an external command (differential pressure or time) alternate units of the Spin Klin system go into back-flush mode. The inlet three-way valve closes the inlet to the filter pod and opens the drain. The outlet three-way valve closes the outlet of the filter pod and opens the external source. During the back-flush process, the compression spring is released and the pressure difference is eliminated. The spine piston rises, releasing the pressure on the discs. Tangential jets of clean water are pumped at high pressure in the opposite direction through nozzles at the center of the spine. The discs spin free and clear, loosening the trapped solids. Solids are quickly and efficiently flushed out through the drain.

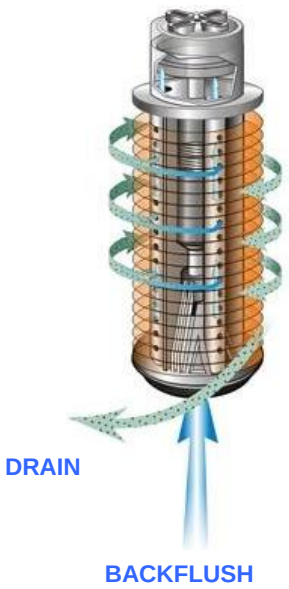

Modes of the filter's Control valve

Filtration Position:

Inlet valve - Water flows from port [2] (main supply) to port [C] (filter connection). Port [1] (drain water outlet) is closed by the seal.
Outlet valve - Water flows from port [C] to port [2]. Port [1] is closed by the seal.

Back-flush Position:

Inlet valve - Command pressure is applied to the diaphragm's control chamber through port [D]. The diaphragm moves the sealed shaft, port [2] closes, preventing flow to the filter. Port [1] opens, allowing flushing water to flow from port [C] (filter connection) to the drain [1].
Outlet valve - Command pressure is applied to the diaphragm's control chamber through port [D]. The diaphragm moves the sealed shaft, port [2] closes, port [1] opens, allowing flushing water to flow to port [C].

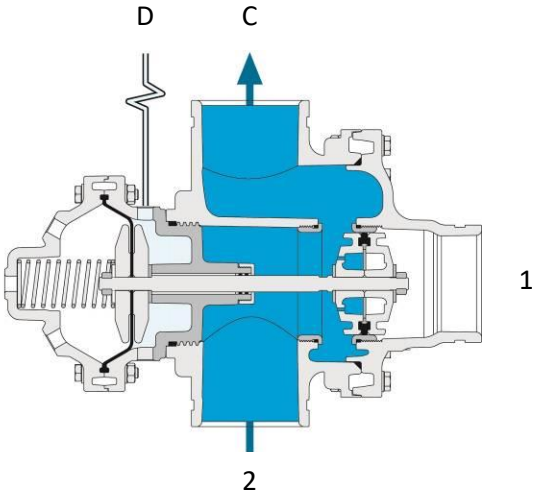

Inlet Valve Filtration Mode

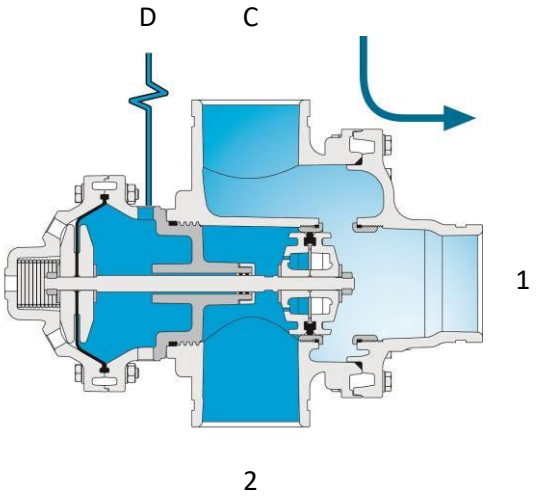

Inlet Valve Back-flush Mode

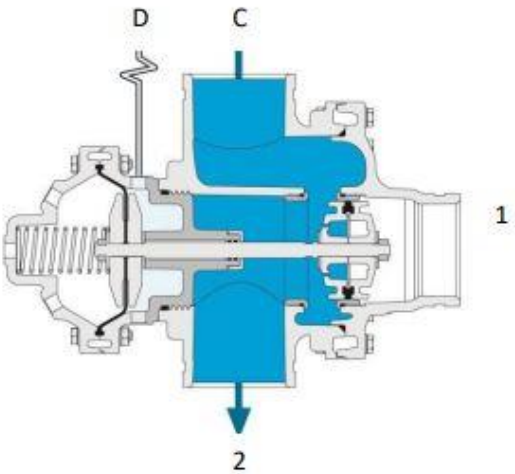

Outlet Valve Filtration Mode

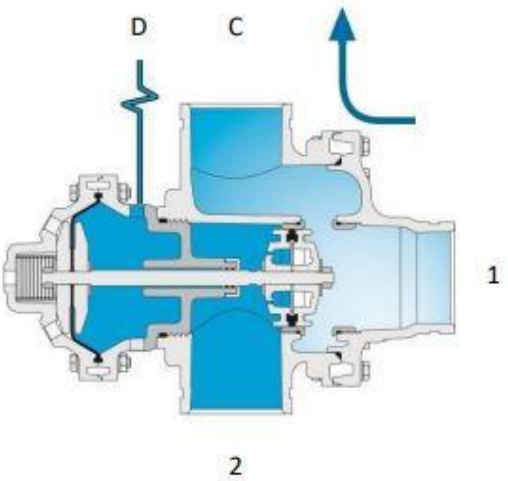

Outlet Valve Back-flush Mode

Modes of Operation

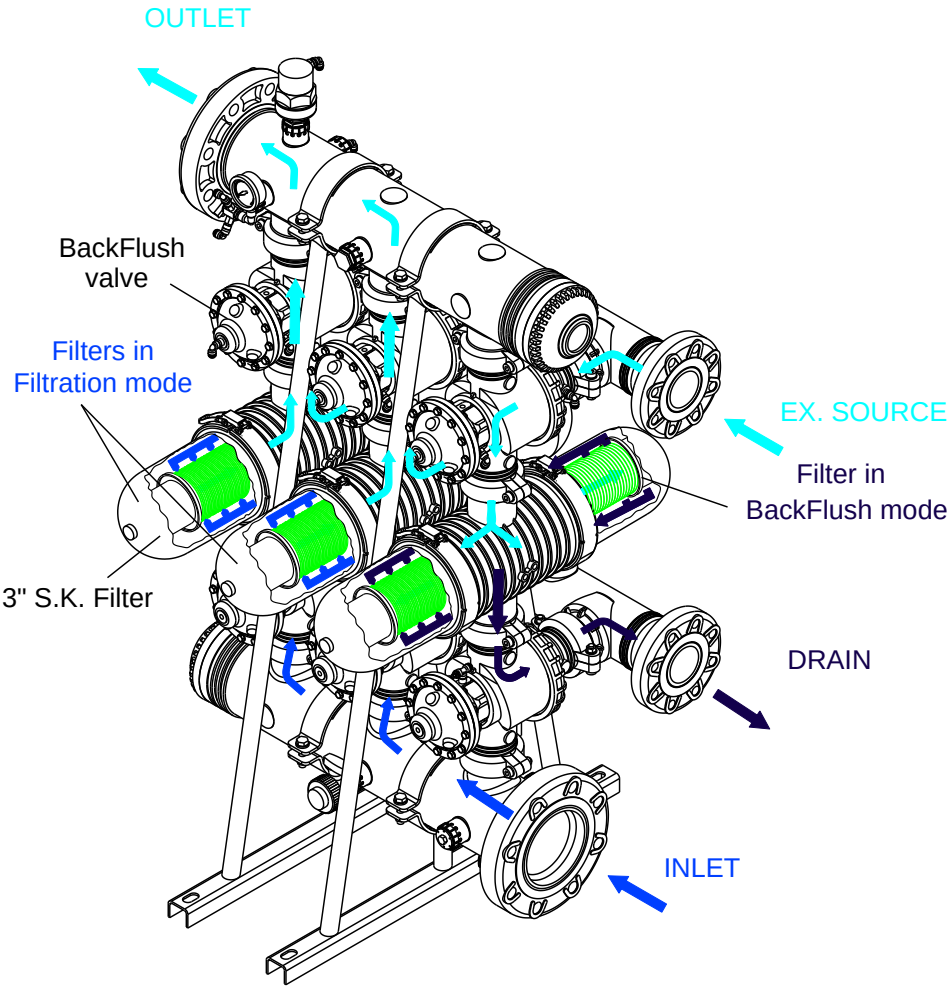

5. DESCRIPTION AND FILTER OPERATION

During the filtration stage, water flows through the INLET manifold and is distributed through the first 3”x3” back-flush valves into the Spin Klin filters.
The water then passes through the filters' elements to the outlet manifold through the second 3”x3” back-flush valves for consumer use.

Description of the Back-Flushing Process

The back-flushing process of this system is carried out by external source water; therefore each filter is equipped with 2 flush valves.

1. The controller transmits an electrical command to the first solenoid according to either differential pressure or time.
2. The solenoid then sends a pressure command to the back-flush valves, switching them from filtration mode to back-flushing mode.
3. Filter #1 is then back-flushed with water from **the External Water Source**. Contaminated water and impurities flow out through the drain manifold.
4. Upon completion of the allotted back-flush time the controller releases the back-flush command. Filter #1 returns to filtration mode.
5. Filter #2 then enters back-flushing mode and the process is repeated until all the filters in the system are back-flushed.
6. After all the filters have been back-flushed the system returns to filtration mode, till the next back-flush cycle.

6. TECHNICAL DATA

Parameters	METRIC	US
Maximum pressure	10 bar (25° C)	145 (77 °F)
Minimum working pressure Minimum pressure for back-flush: 400µ-130µ 100µ-70µ 50µ-20µ	1.0 bar 3 bar 3.5 bar 5 bar	14.5 psi 43.5 psi 50.75 psi 72.5 psi
Back-flush flow rate per single spine: 400µ-130µ 100µ-70µ 50µ-20µ	 20 m^3/hr 22 m^3/hr 22 m^3/hr	 88 gpm 100 gpm 100 gpm
Maximum temperature	60 °C (@4 bar)	158 °F (@58 psi)
PH	4-11	4-11

Construction Materials	
Filter Housing & Lid	RPA (Reinforce Polyamide) or RPP (Reinforce Polypropylene)
Disc elements	PP (Polypropylene) or PA (Polyamide)
Backwash valves	RPA (Reinforce Polyamide) or RPP (Reinforce Polypropylene)
Manifolds	PP (Polypropylene)
Seals	NBR or EPDM, (Viton optional)
Control Tubing	PE or PA

Parameters	Metric	US
Battery Weight: Dry (3 unit battery)	110 kg	242 lbs
Noise Limit	<70 db(A)	<70 db(A)

7. INSTALLATION AND OPERATION

Installation

A. Check for any transport damage (the system operates under pressure!).
B. Make sure that the inlet and outlet flow orientations are correct (shown by arrows on the system).
C. Connect the Inlet the Outlet and the Drain ports together with their valves to the Main Manifolds.
D. Verify that all the covers' clamps are properly closed!
E. Connect and check the water source pressure.
F. Connect the Air pressure source to the solenoid and Accumulator.

Start-up Operation

- If possible, perform a dry test run (once or more) on the system and make sure that all the connections and wiring are ok.
- Run the system by slowly opening the inlet valve; allow air to vent out of the system through the Air Release Valve which is mounted on top of the Inlet manifold.
- Once the air is vented, check for any leakage that may happen during transportation and installation.
- If the pressure difference across the filters is high, verify that the flow rate is not too high. An excessive flow rate through the filter causes excessive pressure loss.
- Open the Air Supply and check the air pressure.
- Manually start a back-flushing cycle and make sure that all the system's components function correctly.
- If after the back-flushing cycle the pressure difference is not reduced, check that the flow is not too high.

PLC/Control

Note: PLC/Controllers are varied according to the Order.

- Refer to the manufacturer's handbook before installing the PLC/Controller.
- Make sure that the voltage is correct BEFORE connecting it.
- Check that the ΔP hydraulic switch HIGH and LOW pressure tubes are correctly connected to the appropriate ports.
- Set the DP Switch to the required ΔP (Recommended ΔP is 5m/ 7PSI according to the site conditions).
- Set the PLC/Controller Back-flush Time to 15 seconds and the Dwell time to 5-10 seconds. These settings may require adjustment in order to conform to local water conditions. Typically, a 1 to 3 hour interval between back-flushing cycles is recommended.
- Typically, the Back-flush Cycle Time is used as a backup for the DP switch; any signal that triggers a back-flushing cycle resets the back-flush cycle timer (including Manual Start command).

Control Scheme - External Source for back flush

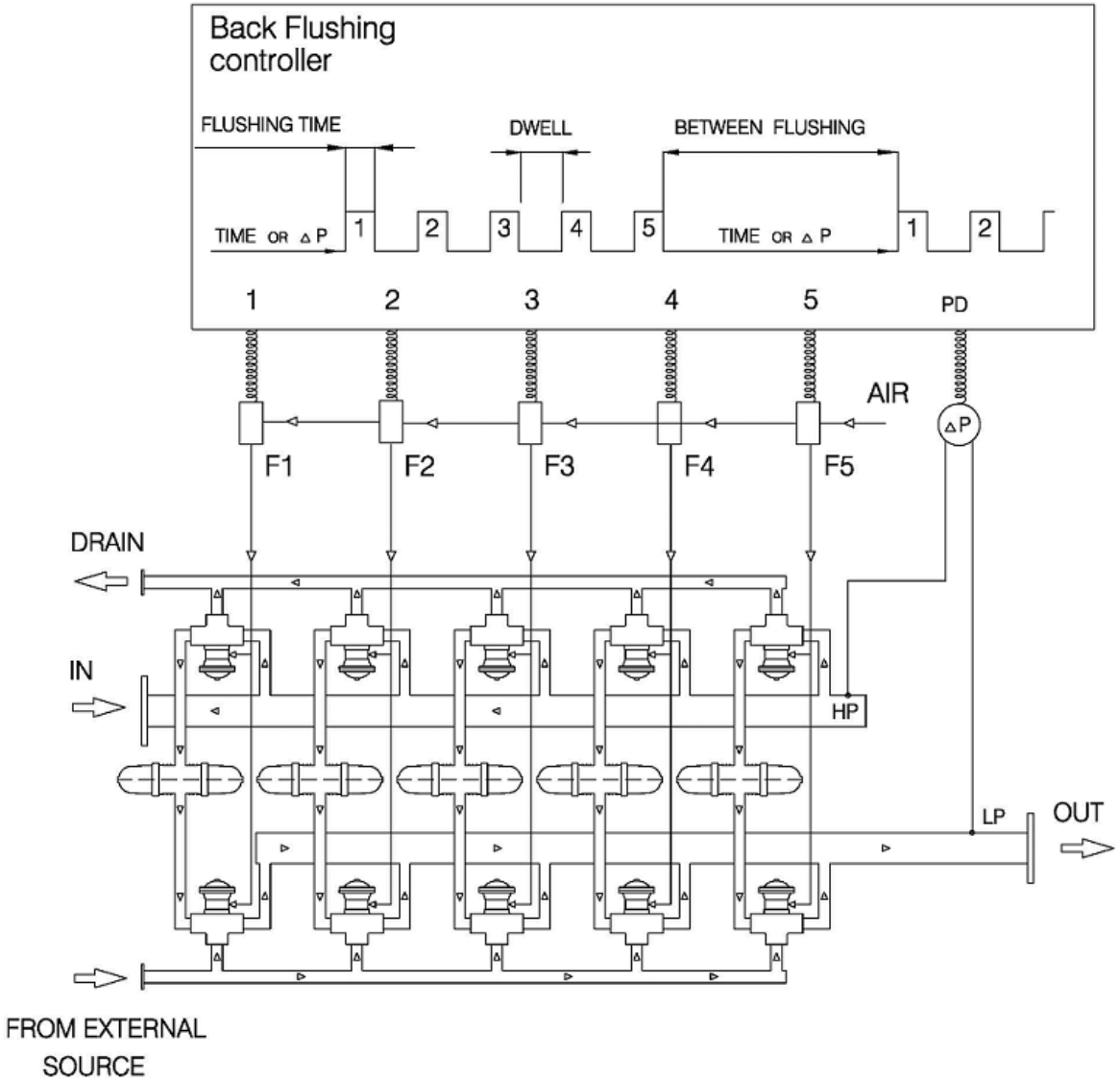

Start-up Operation

A. Gradually open the inlet valve (make sure that the outlet valve is partially open).

<u>WARNING</u> Take precaution while operating the system as it may enter to back-flush mode automatically, without warning.

B. Check the system assembly and its connections for leaks.

C. Perform a back-flush cycle by disconnecting the low-pressure tube from the differential pressure indicator (closing the electrical circuit) make sure to re-connect it immediately as the back-flush cycle starts.

D. Verify that the back-pressure reading during back-flushing is according the recommended pressure for your system specific filtration degree.

E. When the filter is clean, verify that the differential pressure between the inlet and the outlet ports does not exceed 2m (3 PSI).

F. Check that the differential pressure indicator is set for starting a back-flushing cycle at 5m (7 psi)

G. Perform an additional back-flushing cycle manually by rotating the operation handle (turn clockwise 90°) located on the solenoid valve. Make sure to rotate the handle back to automatic mode once the back-flushing starts.

8. SPIN KLIN SYSTEM MAINTENANCE

Monthly Maintenance

Check the inlet /outlet pressures:

When the pressure differential is above 5m / 7 PSI, activate automatic back-flush of the Spin Klin system.

In the event that the pressure differential remains high, check for possible failures.

Check for leakages from the drain manifold:

When there is a leakage of water to the drain during the filtration stage, check for possible failure of the back-flush valve seals.

Back-flush controller performance:

Check that the controller timing parameters are correctly adjusted and activate the automatic back-flush cycle.

In the event of a back-flush controller malfunction, check for possible failures.

Cleaning of the Command Filter:

Close the command-filter inlet valve, release the pressure trapped in it and remove the cover. Thoroughly clean the filtration element, then reinstall the command filter element and cover and open the inlet valve.

Winterization:

To prevent the filter battery becoming damaged during water freezing – drain all the water from the filter battery and the command filter and leave the drain valve opened.

NOTE:
Before performing any maintenance work on the battery, make sure all water and air connections are disconnected and that the pressure has been released.

Seasonal Maintenance – Cleaning the Discs

When manual cleaning of the discs is required, please follow the steps described below:

Make sure that system is not under pressure! Release the clamp and remove the cover (Figures 1, 2)

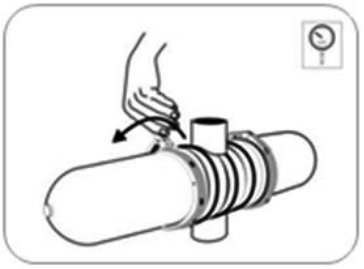

Figure 1

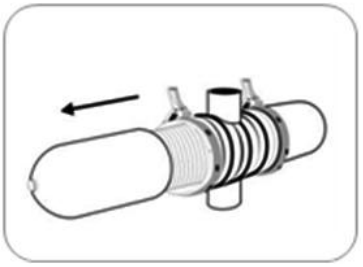

Figure 2

Unscrew the butterfly-nut on the filtration element (Figure 3) Remove the tightening cylinder (Figure 4)

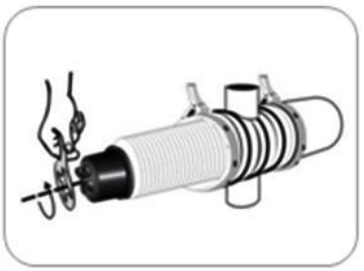

Figure 3

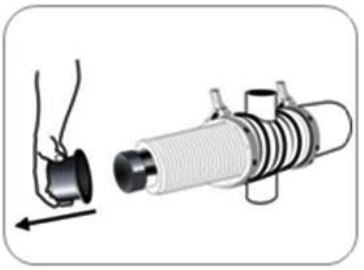

Figure 4

Remove the discs (for convenience we recommend using a plastic bag) (Figures 5, 6)

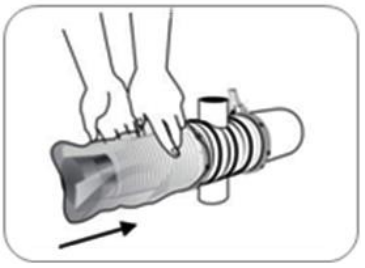

Figure 5

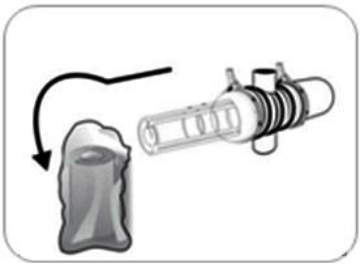

Figure 6

Tie each set on a string and place them in a cleaning solutions (HCL, Chlorine, or other) refer to “Cleaning Recommendations Clogged Filtration Discs”. Thoroughly wash the discs with fresh water (Figure 7) Reassemble the discs on the spines; check that the correct quantities of discs are assembled on the spine: when the discs are pressed with two hands, the top disc should be level with the imprinted circle on the outside of the spine (Figure 8)

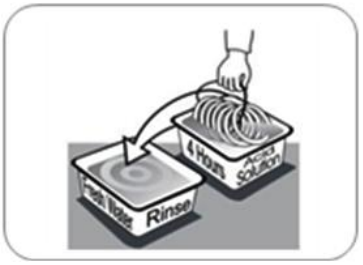

Figure 7

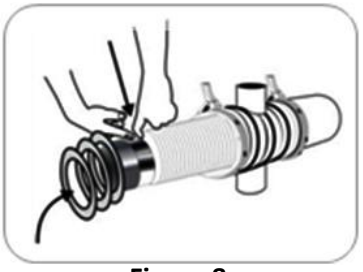

Figure 8

Put on the tightening cylinder and tighten the butterfly-nut, then reassemble the filter cover and tighten the clamp (Figures 9, 10)

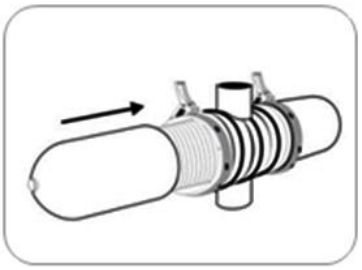

Figure 9

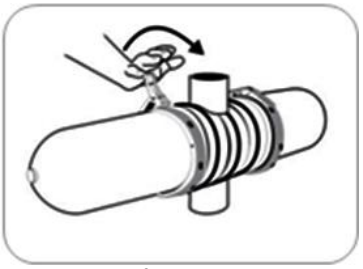

Figure 10

Cleaning Recommendations for Clogged Filtration Discs

Water-formed deposits may cause clogging of the filter discs. The formation of these deposits depends on the quality of the filtered water and environmental conditions like temperature, pH, light, duration of filtration and more.

Common water-formed deposits are:

- Biological or organic deposits (mostly mucous or oily to the touch, beige, brown or green in color)
- Iron oxide (rust) or other metal oxides
- Carbonates (white or gray deposit)
- Combinations of the above

If these deposits cannot be eliminated by pretreatment of the water, we recommend the following cleaning procedure:

Material and Equipment

- A well ventilated working place.
- 2 small containers (1 liter), 2 large containers (15 liters) and a stirring stick, all resistant to chemicals, preferably of polypropylene.
- Plastic rope to tie up the disc.
- Sodium Hypochlorite NaOCl - Strong oxidizing liquid, commercial concentration: 10%. Oxidizes and removes organic and biological deposits.
- Hydrochloric Acid HCl - Very corrosive liquid, commercial concentration: 30%. Dissolves and removes carbonates, iron oxide, and other deposits.
- Safety equipment: safety glasses, gloves, long pants, long sleeved shirt and shoes.

ATTENTION!

While working with chemicals protect yourself with the necessary safety equipment:

- Safety glasses, gloves, protective clothing
- Work in a well-ventilated area
- Follow the manufacturer's instructions

Cleaning Organic and Biological Deposits

- Open the filter and remove dirty discs. **Attention** – Never open the filter before the pressure has been released.
- Arrange the discs loosely on the plastic rope
- Prepare a 5% Sodium Hypochlorite solution:
    1. Pour 5 liters of water into one of the large containers.
    2. Add 5 liters of Sodium Hypochlorite (10%) into the water.
- Soak the discs in the solution so that both sides are covered. To achieve maximum cleaning, agitate the discs several times with a stirring stick.
- Contact time with cleaning solution: up to 8 hours
- Remove the discs carefully from the solution, put them in the second large container and rinse them very well with clean water before placing them back in the filter.
- We recommend flushing the cleaned discs again in the filter to ensure that all chemical residues are removed.

The cleaning solution can be used for several sets of discs. As the cleaning activity of the solution deteriorates, it may be necessary to soak the discs for a longer time.

Cleaning Carbonates and Iron Deposits

- Open the filter and remove the dirty discs.
- Arrange the discs loosely on the plastic rope.
- Prepare a 5% Solution of Hydrochloric Acid:
    1. Pour 10 liters of water into one of the large containers.
    2. Carefully add 2 liters of Hydrochloric Acid (30%) into the water. Soak the discs in the solution so that both sides will be covered.

  PLEASE NOTE: Carbonates react violently with hydrochloric acid (foaming, gas evolution).
  To achieve maximum cleaning, agitate the discs several times with a stirring stick.
- Contact time with cleaning solution: 1 - 8 hours.
- Remove the discs carefully from the solution and rinse them well with clean water before placing them back in the filter.
- We recommend flushing the cleaned discs again in the filter to ensure that all chemical residues are removed.

The cleaning solution can be used for several sets of discs. It may be necessary to soak the discs for a longer period as the cleaning activity of the solution deteriorates.

Cleaning Complex Deposits

If the composition of the deposit is not known, perform the following test:

- Take 5 discs for the test.
- Soak 2 discs in a 5% Sodium Hypochlorite Solution.
  Preparation of the solution:
  Pour 1 cup of water into a small container, then add 1 cup of Sodium Hypochlorite (10% NaOCl).
- Soak 2 discs in a 5% Hydrochloric Acid Solution.
  Preparation of the solution:
  Pour 2½ cups (= 500ml) of water into a small container, then add carefully
  ½ cup (= 100ml) of Hydrochloric Acid (30% HCl).
- Keep one disc as a control.
  Observe the cleaning process:
  If one of the solutions removes all the deposit, clean the discs in that solution according to the instructions above.
  If neither solution removes the deposit completely, continue with the test procedure.
- Remove the discs from both solutions, rinse them well with water and soak them in the second solution: put the two discs, which have been in the Sodium Hypochlorite Solution, in the Hydrochloric Acid Solution, and the other way around.
- Check the cleaning process:
  If one of the treatments removes all the deposit, clean all the discs following the same two-step procedure in the exact same order. Rinse the discs well between the two cleaning processes. If the deposit hasn't been completely removed, send a set of untreated discs to the laboratory for further examination.

9. TROUBLESHOOTING

No Backwash Operation

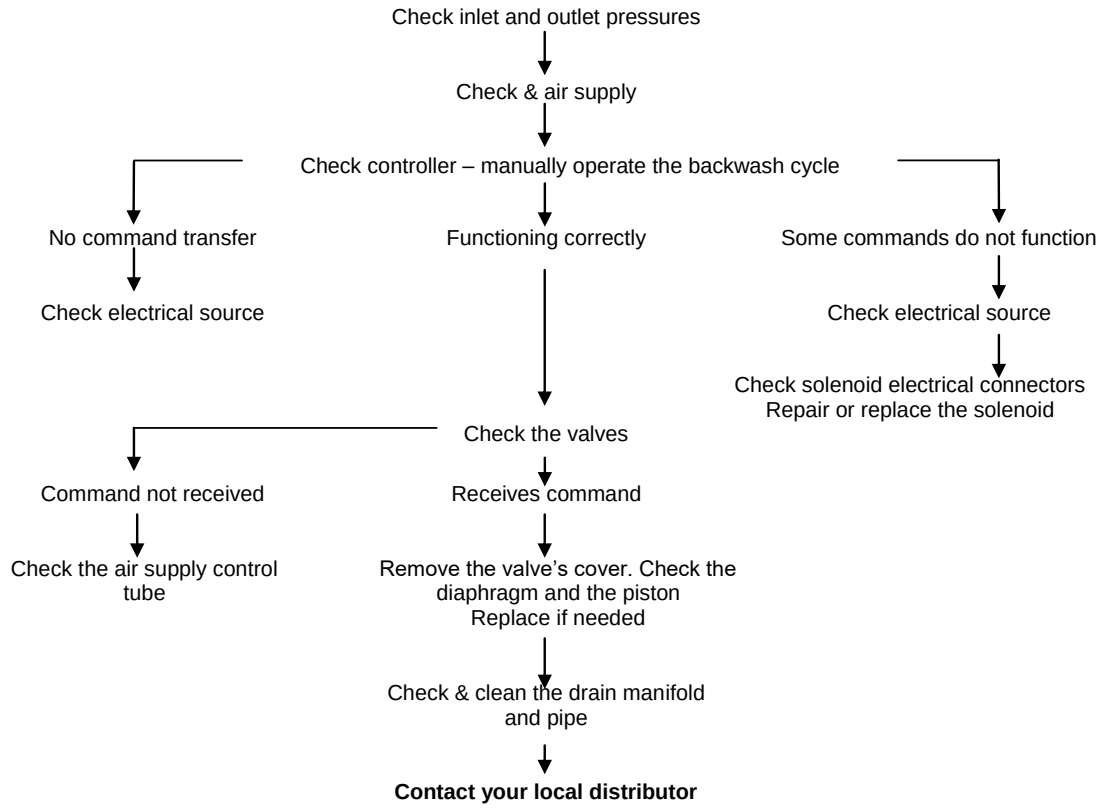

Continuous or Non-stop Backwashing

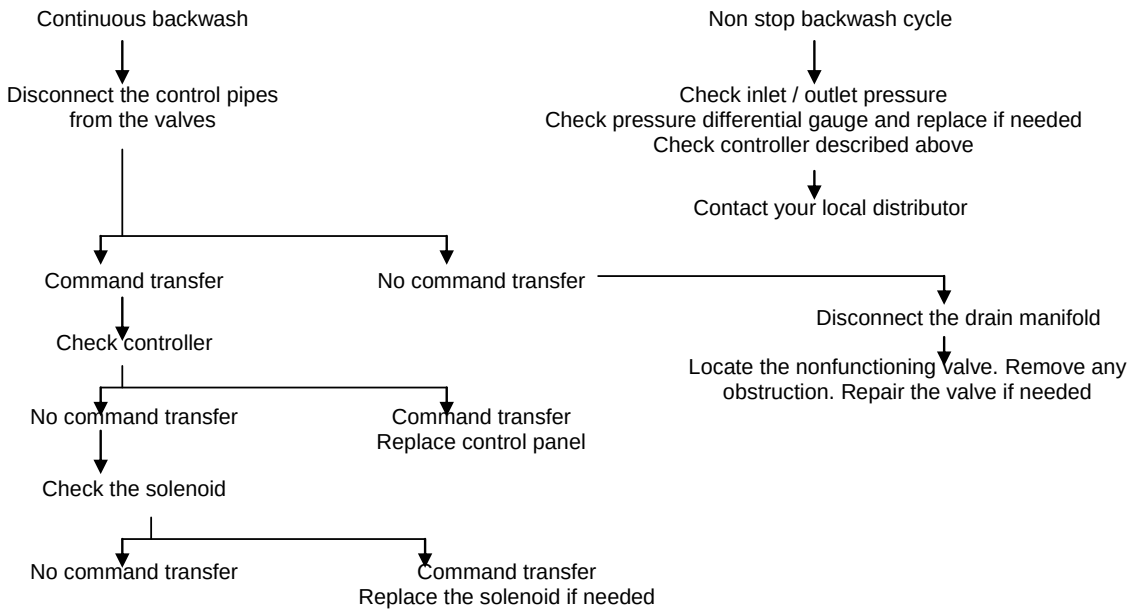

Contact your local distributor

10. FILTER PARTS SCHEDULE AND PARTS LIST

No.	SAP	Description
1	710103-005233	FILTER COVER
	710101-000899	TRANSPARENT COVER
2	770104-000248	2" COVER SEAL
3	760108-000002	CLAMP
4	700101-002255	SPINE ASSEMBLY 2.8 2-3" SK RPA
	700101-002258	SPINE ASSEMBLY 2.8 2-3" SK RPA AW
	700101-002259	SPINE ASSEMBLY 2.8 2-3" SK RPA SW
	700101-002256	SPINE ASSEMBLY 2.8 2-3" SK RPA LCE
4.1	710101-000435	BUTTERFLY NUT
4.2	710101-000106	TIGHTENING CYLINDER
4.3	710101-000436	S.K. SPINE PISTON
4.4	760109-000045	ANTI FRICTION S/ST316 F/2.7SK DW
	760109-000467	ANTI FRICTION SUPER DUPLEX F/2.7SK DW
4.5	770104-000372	CONE MEMBRANE NATURAL 65 SHORE
	770104-000384	CONE MEMBRANE NATURAL 65 SHORE LCE 2.8 SK
4.6	770102-000034	'O''-RING 2*237
5	700101-001176	DISC SET (130MIC)
6	700101-002267	FILTER ELEMENT (130MIC)
7	700190-001156	FILTER BODY COMPLETE
7.1 + 7.2	700190-001305	PRESSURE CHECK POINT ASSEMBLY
8	760109-000055	BUTTERFLY NUT WRENCH
9	760109-000131	S.K. SPINE WRENCH

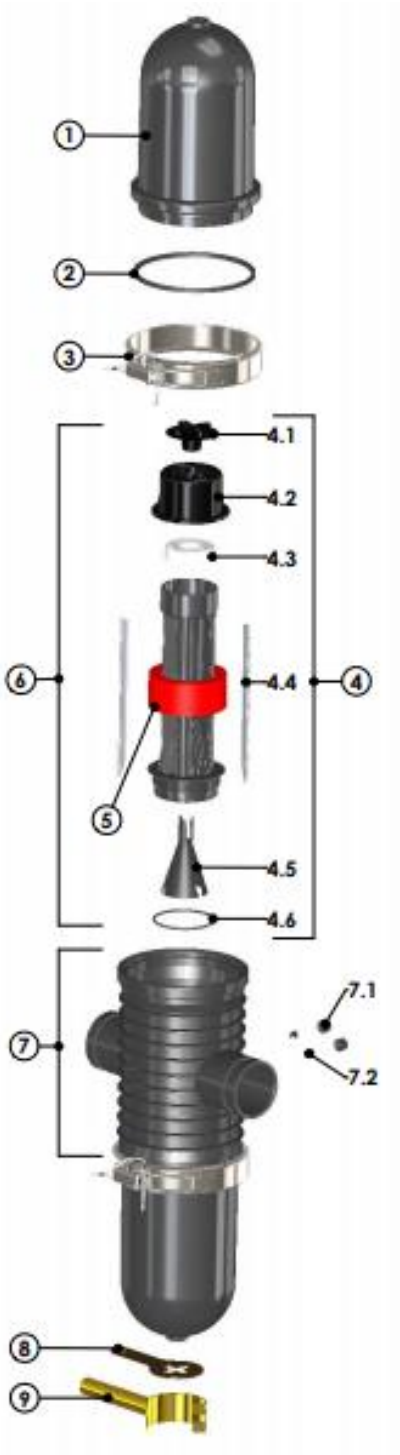

10.1 FILTER PARTS SCHEDULE AND PARTS LIST - DRINKING WATER CONFIGURATION

No.	SAP	Description
1	710103-004798	FILTER COVER DW
	710101-000899	TRANSPARENT COVER
2	770104-000015	2" COVER SEAL DW
3	760108-000002	CLAMP
4	700101-002257	SPINE ASSEMBLY 2.8 2-3" SK RPP EPDM SEALS DW
4.1	710101-000125	BUTTERFLY NUT GREY DW
4.2	710101-000127	TIGHTENING CYLINDER GREY DW
4.3	710101-000436	S.K. SPINE PISTON
4.4	760109-000045	ANTI FRICTION S/ST316 F/2.7SK DW
	760109-000467	ANTI FRICTION SUPER DUPLEX F/2.7SK DW
4.5	770104-000375	CONE MEMBRANE EPDM 70 SHORE 2.7 SK DW
4.6	770102-000035	'O''-RING 2*237 EPDM DW
5	700101-001176	DISC SET (130MIC) DW
6	700101-002345	FILTER ELEMENT (130MIC) EPDM SEALS DW
7	710101-001462	1/4" CAP BSPT RPP GREY DW
8	770104-000045	GAUGE PORT SEAL
9	700190-005503	3'' SK PP GRV BODY DW
10	760109-000055	BUTTERFLY NUT WRENCH
11	760109-000131	S.K. SPINE WRENCH

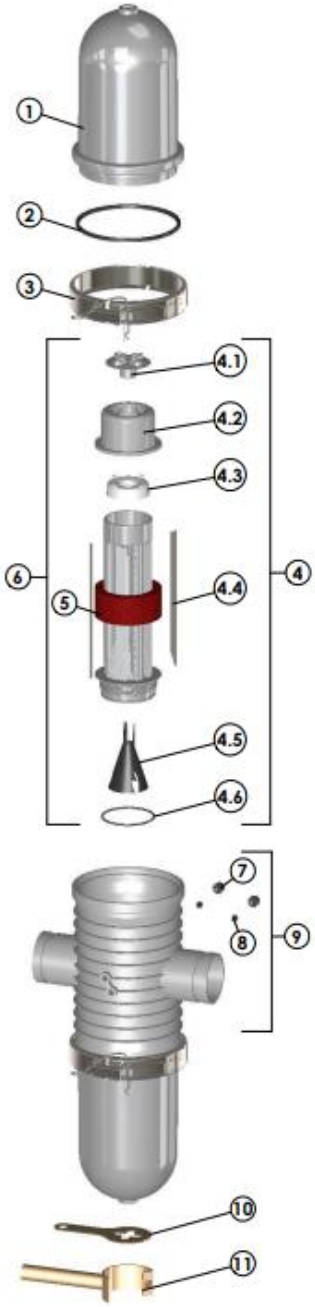

11. VALVES - PARTS SCHEDULE AND PARTS LIST

350 Series Plastic Back-flush Filter Valve - Double Chamber Straight/Angle & Reverse Flow Size: 3"x3"

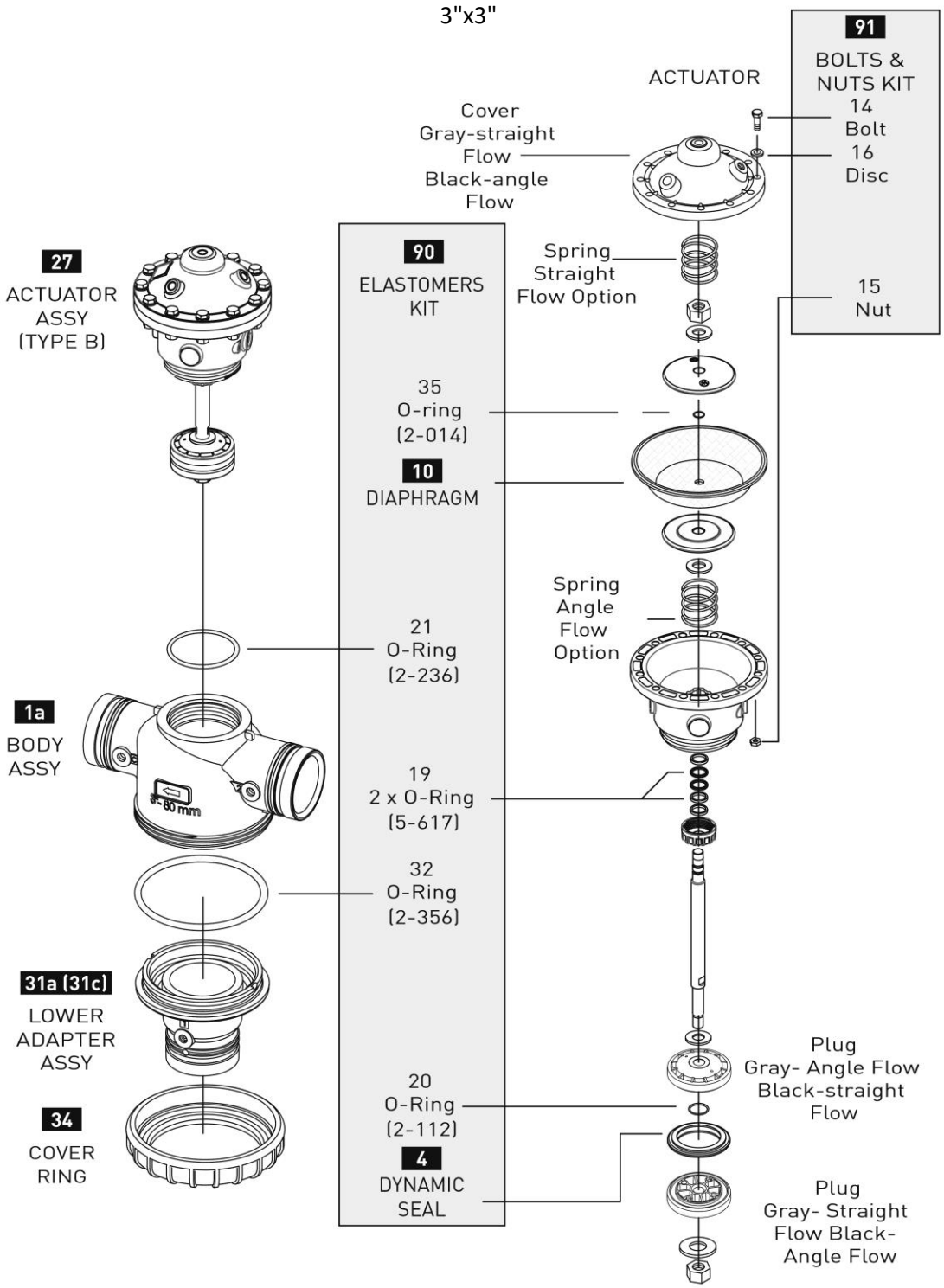

31a - LOWER ADAPTER ASSY WITH 2" THREAD (STRAIGHT FLOW)
31c - LOWER ADAPTER ASSY - GROOVED (ANGLE FLOW)

11.1 STANDARD VALVES PARTS LIST

STRAIGHT FLOW 3X3(2) 350 VICTAULIC/BSP RPA BLACK BERMAD 730102-000179

No.	Description	SAP
1a	BODY ASSY. F/3" VALVE PLASTIC BERMAD	730113-000396
31a (31c)	LOWER ADAPTOR F/3" STRAIGHT FLOW PLASTIC BERMAD	730113-000395
27	VALVE ASSY. F/3" STRAIGHT FLOW BERMAD	730113-000608
34	FIXING NUT F/3" STRAIGHT FLOW PLASTIC BERMAD	730113-000394
90	SEALS + DIAPHRAGM KIT F/3" 350 BERMAD	730113-000767
10	DIAPHRAGM FOR 3X3 BERMAD VALVE	730113-000538
4	SEAL F/3*2BER	730113-000359
91	BOLTS-NUTS KIT F/3" 350 BERMAD	730113-000766

STRAGHT REVERSE FLOW 3X3 350 VICTAULIC RPA BLACK BERMAD 730102-000123

No.	Description	SAP
1a	BODY ASSY. F/3" VALVE PLASTIC BERMAD	730113-000396
31a (31c)	LOWER ADAPTOR F/3" 350 PLASTIC BERMAD VIC	730113-000770
27	VALVE ASSY. F/3" STRAGHT REVERSE FLOW PLASTIC BERMAD	730113-000609
34	FIXING NUT F/3" STRAIGHT FLOW PLASTIC BERMAD	730113-000394
90	SEALS + DIAPHRAGM KIT F/3" 350 BERMAD	730113-000767
10	DIAPHRAGM FOR 3X3 BERMAD VALVE	730113-000538
4	SEAL F/3*2BER	730113-000359
91	BOLTS-NUTS KIT F/3" 350 BERMAD	730113-000766

11.2 AW VALVES PARTS LIST

STRAIGHT FLOW 3X3 AGRESSIVE WATER BERMAD **730113-000405**

No.	Description	SAP
1a	BODY ASSY. F/3" 350 PLASTIC BERMAD WA	730113-000776
31a (31c)	LOWER ADAPTOR F/3" 350 PLASTIC BERMAD WA VIC/TRH	730113-000777
27	VALVE ASSY. F/3" STRAIGHT FLOW BERMAD WA	730113-000611
34	FIXING NUT F/3" STRAIGHT FLOW PLASTIC BERMAD	730113-000394
90	SEALS + DIAPHRAGM KIT F/3" 350 BERMAD	730113-000767
10	DIAPHRAGM FOR 3X3 BERMAD VALVE	730113-000538
4	SEAL F/3*2BER	730113-000359
91	BOLTS-NUTS KIT F/3" 350 BERMAD	730113-000766

STRAGHT REVERSE FLOW 3X3 350 VICTAULIC RPA BLACK AGRESSIVE WATER BERMAD **730102-000126**

No.	Description	SAP
1a	BODY ASSY. F/3" 350 PLASTIC BERMAD WA	730113-000776
31a (31c)	LOWER ADAPTOR F/3" 350 PLASTIC BERMAD WA VIC/TRH	730113-000777
27	VALVE ASSY. F/3" STRAGHT REVERSE FLOW PLASTIC BERMAD WA	730113-000612
34	FIXING NUT F/3" STRAIGHT FLOW PLASTIC BERMAD	730113-000394
90	SEALS + DIAPHRAGM KIT F/3" 350 BERMAD	730113-000767
10	DIAPHRAGM FOR 3X3 BERMAD VALVE	730113-000538
4	SEAL F/3*2BER	730113-000359
91	BOLTS-NUTS KIT F/3" 350 BERMAD	730113-000766

11.3 SW VALVES PARTS LIST

STRAIGHT FLOW 3X3 RPP/DUPLEX BERMAD **730113-000408**

No.	Description	SAP
1a	BODY ASSY. F/3" 350 PLASTIC BERMAD WA-S. DUPLEX	730113-000781
31a (31c)	LOWER ADAPTOR F/3" 35 0 PLASTIC BERMAD WA-S. DUPLEX VIC/TRH	730113-000783
27	VALVE ASSY. F/3" STRAIGHT FLOW SUPER DUPLEX BERMAD SW	730113-000409
34	FIXING NUT F/3" STRAIGHT FLOW PLASTIC BERMAD	730113-000394
90	SEALS + DIAPHRAGM KIT F/3" 350 BERMAD	730113-000767
10	DIAPHRAGM FOR 3X3 BERMAD VALVE	730113-000538
4	SEAL F/3*2BER	730113-000359
91	BOLTS-NUTS KIT F/3" 350 BERMAD	730113-000766

STRAGHT REVERSE FLOW 3X3 350 VICTAULIC RPA/DUPLEX BLACK SW BERMAD **730102-000127**

No.	Description	SAP
1a	BODY ASSY. F/3" 350 PLASTIC BERMAD WA-S. DUPLEX	730113-000781
31a (31c)	LOWER ADAPTOR F/3" 350 PLASTIC BERMAD WA-S. DUPLEX VIC	730113-000782
27	VALVE ASSY. F/3" STRAGHT REVERSE FLOW SUPER DUPLEX BERMAD SW	730113-000744
34	FIXING NUT F/3" STRAIGHT FLOW PLASTIC BERMAD	730113-000394
90	SEALS + DIAPHRAGM KIT F/3" 350 BERMAD	730113-000767
10	DIAPHRAGM FOR 3X3 BERMAD VALVE	730113-000538
4	SEAL F/3*2BER	730113-000359
91	BOLTS-NUTS KIT F/3" 350 BERMAD	730113-000766

11.4 DRINKING WATER VALVES PARTS LIST

STRAIGHT FLOW 3X3(2) 350 GROOVED/BSP RPA BLACK BERMAD DW 730102-000279

No.	Description	SAP
1a	BODY ASSY. F/3" 350 BLACK PLASTIC BERMAD GRV DW	730113-000866
31a (31c)	LOWER ADAPTOR F/3"/2" 350 BLACK PLASTIC BERMAD GRV/TRH DW	730113-000865
27	ACTUATOR ASSY. F/3" STRAIGHT FLOW TYPE B PLASTIC BERMAD DW	730113-000812
34	FIXING NUT F/3" STRAIGHT FLOW PLASTIC BERMAD	730113-000394
90	SEALS + DIAPHRAGM KIT F/3" 350 BERMAD DW	730113-000814
10	DIAPHRAGM F/3" STRAIGHT FLOW BERMAD	730113-000538
4	SEAL F/3"/2" VALVE BERMAD DW	730113-000816
91	BOLTS-NUTS KIT F/3" 350 BERMAD	730113-000766

STRAIGHT REV. FLOW 3X3(2) 350 GRV/BSP RPA BLACK BERMAD DW 730102-000287

No.	Description	SAP
1a	BODY ASSY. F/3" 350 BLACK PLASTIC BERMAD GRV DW	730113-000866
31a (31c)	LOWER ADAPTOR F/3" 350 BLACK PLASTIC BERMAD GRV DW	730113-000864
27	ACTUATOR ASSY. F/3" STRAGHT REV. FLOW TYPE B PLASTIC BER. DW	730113-000862
34	FIXING NUT F/3" STRAIGHT FLOW PLASTIC BERMAD	730113-000394
90	SEALS + DIAPHRAGM KIT F/3" 350 BERMAD DW	730113-000814
10	DIAPHRAGM F/3" STRAIGHT FLOW BERMAD	730113-000538
4	SEAL F/3"/2" VALVE BERMAD DW	730113-000816
91	BOLTS-NUTS KIT F/3" 350 BERMAD	730113-000766

12. SYSTEM DRAWINGS (to be amended per each specific ordered)

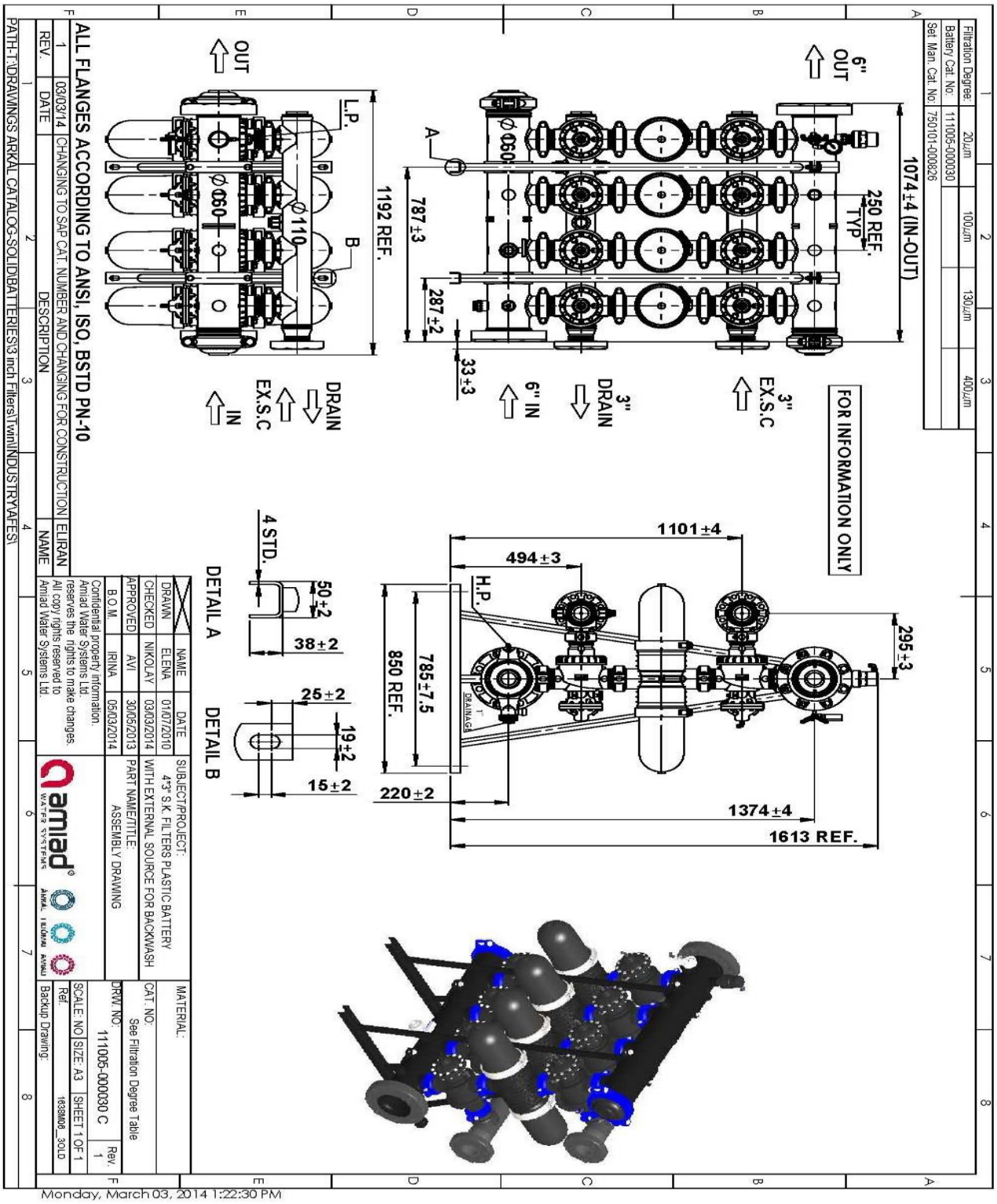

13. AMIAD LIMITED WARRANTY

1. This certificate applies to Amiad Water Systems Ltd. ("**Amiad**") products purchased by you (the "**Buyer**") from Amiad unless specifically agreed otherwise in writing by Amiad. This Warranty extends only to the original purchaser, and is not transferable to anyone who subsequently purchases, leases, or otherwise obtains the product from the original purchaser.
2. Amiad hereby warrants that the products are and will be free from defects in material and workmanship under normal use and service. Amiad warrants that it will correct manufacturing defects in the products, in accordance with the conditions set out in this Warranty.
3. This Warranty is enforceable for a period of 12 months after the date upon which the products were delivered (the "**Warranty Period**").
4. In the event that during the Warranty Period the Buyer discovers a defect in material and/or workmanship in any product or part (the "**Defective Product**"), it shall submit a written complaint to Amiad using Amiad's standard Buyer Complaint Form. For the receipt of the Buyer Complaint Form, the submission of the complaint or any questions please contact your service representative.
5. Upon written demand by Amiad the Buyer shall return the Defective Product - or a sample thereof - to Amiad, at Amiad's cost. If the Buyer ships any such Defective Product, Amiad suggests the Buyer package it securely and insure it for value, as Amiad assumes no liability for any loss or damage occurring during shipment. Provided however that in the event Amiad determines that this Warranty does not apply to such product, Buyer shall promptly reimburse Amiad for such cost (including freight and customs). Any returned product or part must be accompanied by the Warranty certificate and the purchase invoice. It is clarified that the Buyer may not return the Defective Product unless such return was coordinated and approved by Amiad in advance.
6. Amiad's obligation under this Warranty shall be limited to, at Amiad's option, the repair or exchange, free of charge, of the product or any part which may prove defective under normal use and service during the Warranty Period. The provision of a repair or replacement of a product during the Warranty Period will result in an extension of the Warranty Period by an additional period of 12 months, provided that the total accumulated Warranty Period shall in any event be no more than 18 months from the date upon which the products were delivered.
7. This Warranty is valid on the condition that the products are installed according to Amiad's instructions as expressed in Amiad's instruction manuals and according to the technical limitations as stipulated in Amiad's literature or as stated by a representative of Amiad.
8. This Warranty will not apply to damaged or defective products resulting from or related to:
   - (i) Fire, flood, power surges or failures or any other catastrophe and/or unforeseen occurrence, such as but not limited to those for which the Buyer is customarily insured for, or any force majeure events;
   - (ii) Fault, abuse or negligence of the Buyer;
   - (iii) Intake water not meeting the agreed standards, as set forth in a written document, approved by Amiad, or improper storage;
   - (iv) Improper or unauthorized use of the product or related parts by the Buyer, including Buyer's failure to operate the product in conformity with the recommendations and instructions of Amiad, as set forth in Amiad's manuals and other written materials, the operation of the product other than by a trained and qualified operator, or improper installation of the product by a third party not authorized by Amiad;
   - (v) Performance by the Buyer of maintenance or operation other than in conformity with the recommendations and instructions of Amiad, or other than in accordance with procedures defined in the literature supplied for products (including the timely replacement of requisite parts), and for services provided other than by a trained and qualified advanced operator; or
   - (vi) Any alteration, modification, foreign attachment to or repair of the products, other than by Amiad or its authorized technical representatives.
9. In no event shall Amiad be liable to the Buyer or any third party for any damages to property, or for any intangible or economic loss, including loss of profits, loss of customers or damage to reputation, for any damages, including indirect, special, consequential damages, or punitive damage arising out of or in connection with this Warranty, or arising out of or in connection with the product's performance or failure to perform, even if it has been advised of the possibility of such damages.
10. Amiad will be excused for failure to perform or for delay in performance hereunder if such failure or delay is due to causes beyond its reasonable control or force majeure preventing or hindering performance.
11. This Warranty set forth herein is the only contractual warranty given by Amiad and is provided in lieu of any other warranties created by any documentation, packaging or otherwise.
12. Amiad makes no warranty whatsoever in respect to accessories or parts not supplied by Amiad. In the event that Amiad is required to correct a Defective Product or product not covered by this Warranty, it will do so solely in consideration for additional fees.
13. The parties will actively endeavor to amicably settle any dispute arising between them. In the event that the parties are unable to reach an equitable settlement of such dispute, any claim or lawsuit related to the Warranty, its validity execution, its performance be brought before only the courts of Tel-Aviv, Israel. Israeli law will govern the Warranty, to the exclusion of any conflict of law rules.

CE

Manufacturer

Amiad Water Systems Ltd. D.N. Galil Elyon 1, 1233500, Israel.
Tel: +972 4690 9500 | Fax: +972 48141159 | Email: info@amiad.com

EC REP

European Authorised Representative for CE

Obelis s.a. Bd Général Wahis 53, 1030 Brussels, Belgium.
Tel: +(32) 2732 5954 | Fax: +(32) 27326003 | Email: mail@obelis.net

EU Declaration of Conformity https://www.amiad.com/certificatesDownload.asp