amiad WATER SYSTEMS

# Arkal Spin Klin® 2” Battery

# Service & Maintenance Manual

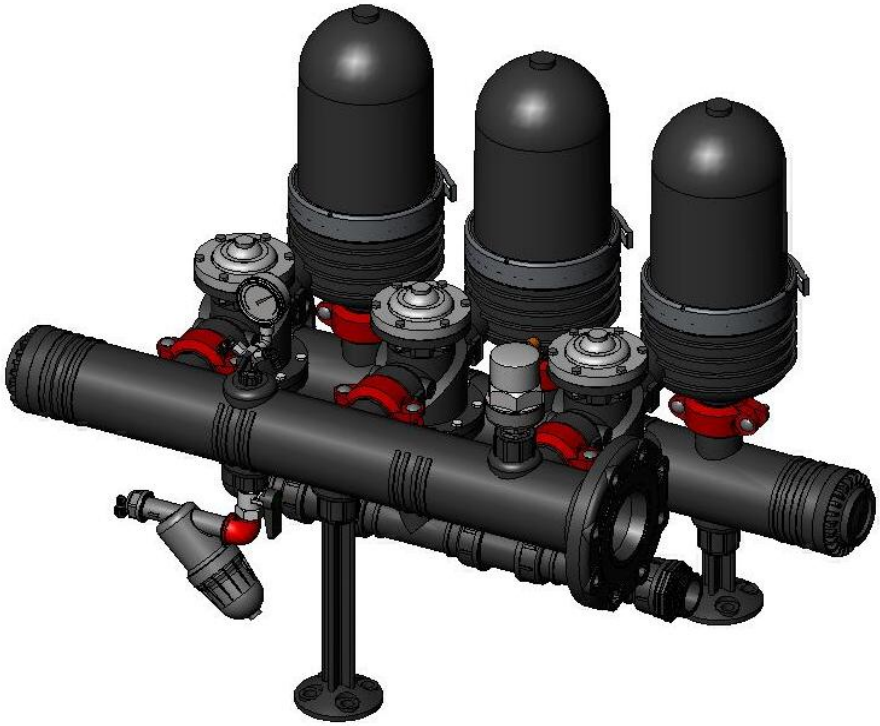

910101-000597 08-2013 - ENG

## Introduction

### General

Arkal Filtration Systems congratulates you on purchasing the 2” Spin Klin Battery with External Source.
All Arkal’s filters are easy to install, use and service and don’t require special skills to operate them.
For operation and maintenance of the filter please follow the instructions in this manual.
This Arkal 2” Spin Klin battery is an automatic self-cleaning filter designed for non-hazardous liquids only and within the pressure and temperature framework described in the specifications table.

### Safety Instructions

1. Prior to installation or handling of the filter, read carefully the installation and operation instructions carefully.
2. Confirm filter draining prior to service.
3. Take precautions while lifting, transporting or installing the filter.
4. Installation of the filter should be performed so as to avoid direct water splashing on any of the filter parts and especially on the electronic control unit.
5. Confirm that filter weight, when full, meets the support construction requirements.
6. Prior to installation confirm that line pressure matches filter’s operational pressure.
7. During installation, use standard flanges and connections only.
8. Check that all filter flange bolts are properly secured.
9. Please note, the filter enters a flushing mode automatically, without prior warning.
10. Use original parts only when servicing the filter.
11. Arkal cannot accept responsibility for any changes or modifications to the equipment.

### Special Note

Before opening the filter lock, check that there is no pressure in the filter.

## Operation

During the filtration stage, water flows through the inlet manifold and is distributed through the 2” x 2” backwash valves into the Spin Klin filters.

The water then passes through the filter elements to the outlet manifold for consumer use.

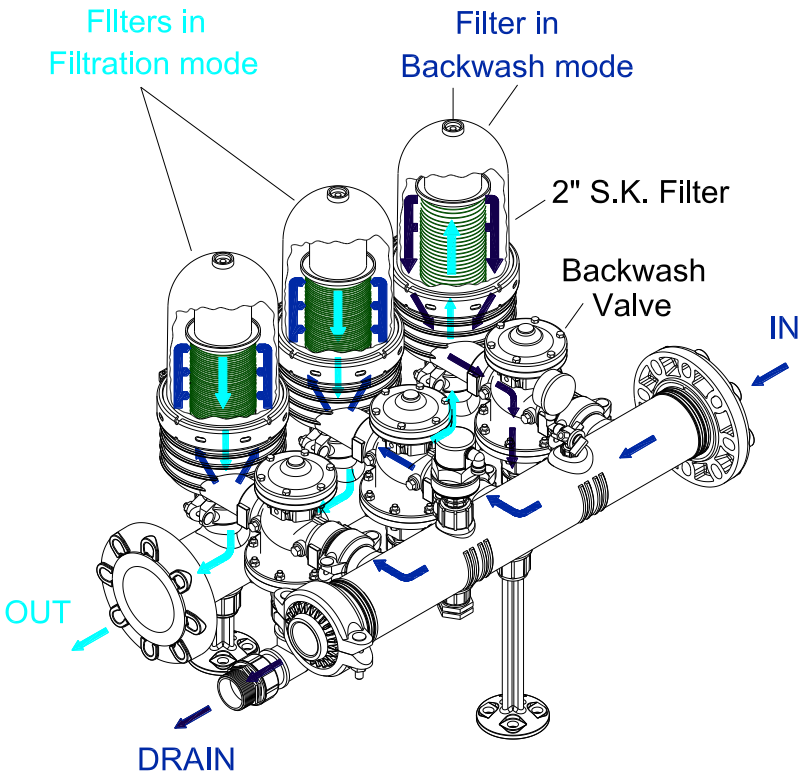


## Description of the Backwashing Process

1. The controller transmits an electrical command to the first solenoid according to either differential pressure or time.
2. The solenoid then sends a pressure command to the backwash valve, moving it from the filtration mode to the backwash mode.
3. Filter #1 is then backwashed with water from the outlet manifold that has been filtered by the other filters in the system. Contaminated water and impurities flow out through the drain manifold.
4. On completion of the allotted backwashing time, the controller releases the backwash command, and filter #1 returns to the filtration mode.
5. Filter #2 then enters the backwash mode, and the process is repeated until all the filters in the system have been backwashed.
6. After all the filters have been backwashed the systems returns to the filtration mode, until the next backwash cycle.

## Spin Klin Technology- Spin Klin Spine

**General:**

The Spin Klin discs are stacked on the Spin Klin spine. The discs are color-coded by micron size**,** and are assembled according to your water filtration requirements. The spine assembly has a spring compression unit and an internal piston which are used to alternately compress and release the discs during filtration and backwash cycles.

**Filtration Mode:**

During the filtration process the filter discs are tightly compressed together by the spring and the differential pressure, forcing the water to flow through the grooves and traps of the discs**.**

**Backwash Mode:**

During backwash the discs are released by releasing the inlet hydraulic pressure. Multi-jet nozzles provide tangential spray on the loosened discs, causing them to spin, and release the retained solids, which are flushed out to the drain.

**Filtration Mode** **Backwash Mode**

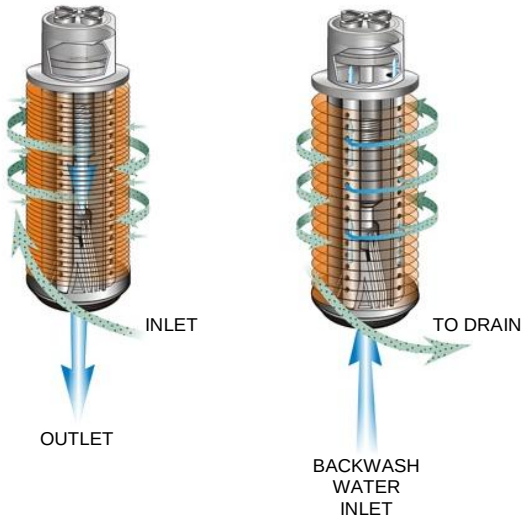


### 2” x 2” Backwash Valve

**Filtration Position:**

Water flows from port A (main supply) to port B (filter connection). Port C (drain water outlet) is closed by the seal.

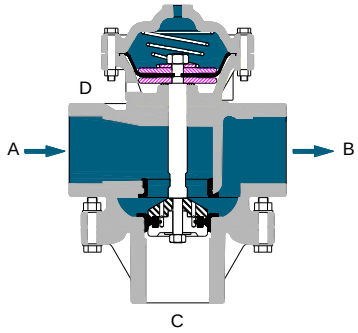


Filtration mode

**Backwash Position:**

Command pressure is applied to the bottom side of the diaphragm through port D.The diaphragm moves up, pulling the sealed body by the shaft. Port A is closed by the seal, preventing flow to the filter. Port C is now open allowing flushing water to flow from port B (filter connection) to the drain.

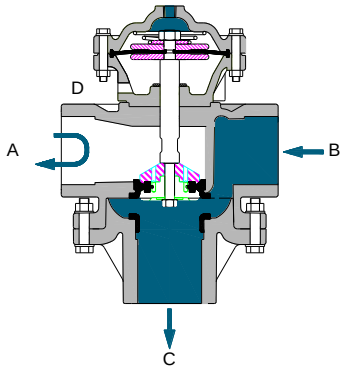


Backflush mode

## System Installation and Startup

### Technical Data

| | | |
|---|---|---|
| Maximum Pressure | 10 bar (25° t) | 140 psi |
| Minimum Pressure | 2.8 bar | 38 psi |
| Backwash Flow Rate per unit | 8 $m^3$/hr | 35 gpm |
| Maximum Temperature | 70°C | 158°F |
| pH | 4-11 | 4-11 |

### 2” Spin Klin Battery

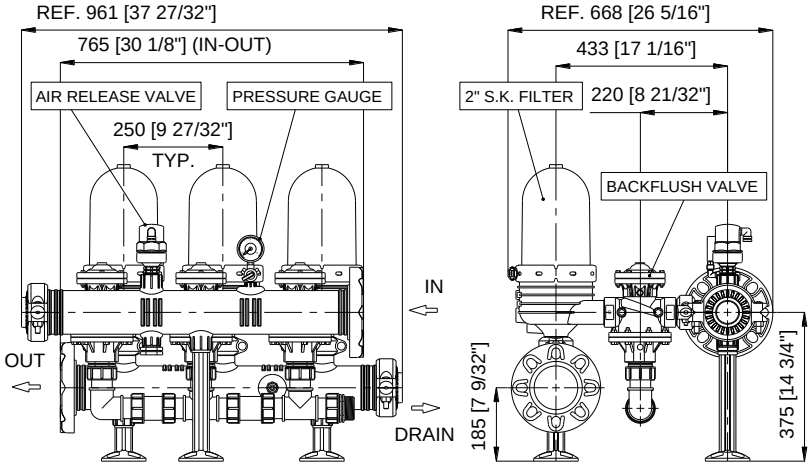


### Installation

A. Make sure that the inlet and outlet orientation is correct (shown by arrows on filter).

B. Prior to start-up check for any transport damage to the unit (system operates under pressure!).

C. Connect backwash drainage line.

D. Cover clamps need to be properly closed.

### Start-up Operation

Start the backwash cycle, making sure that all system components function correctly.

### Filter Load-up during Start-up

- Close the downstream (flow control) valve (if available).
- Flush few cycles until clean.
- Slowly reopen the downstream valve.
- If the pressure difference remains high, check and see if the flow rate is too high.
  An excessive flow rate through the filter causes excessive pressure loss.

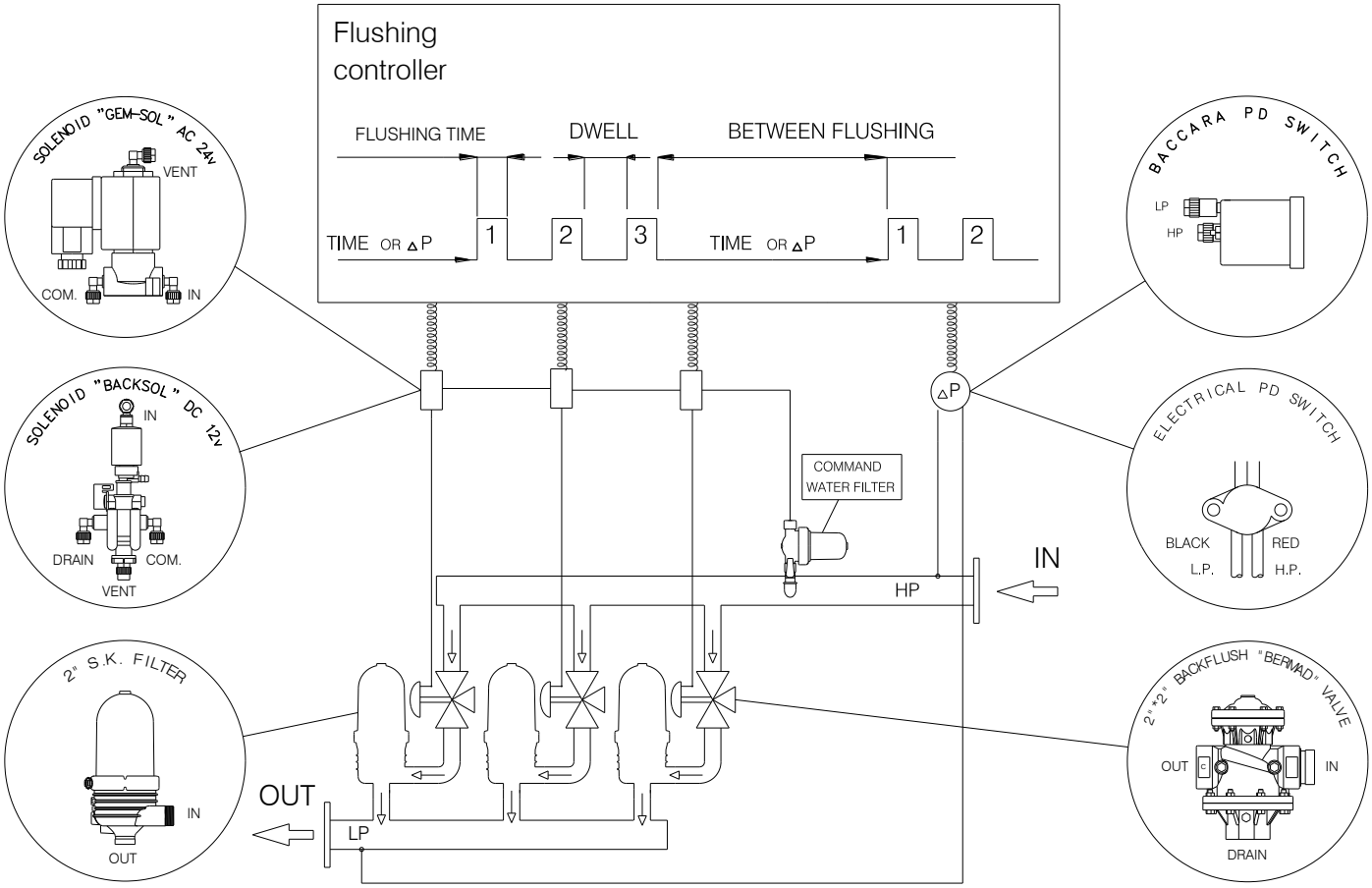


**Control**

- Refer to the manufacturer's handbook before installing the controller.
- Make sure that the voltage of both the solenoid unit and controller are correct.
- Set the manual operation button to automatic.
- Check that the ΔP hydraulic switch HIGH and LOW pressure lines are correctly connected to the appropriate ports.
- Set the starting backwash switch to ΔP 5-7 meters (6 - 8p.s.i.).
- Set the controller to a flush time of 20 seconds and a dwell time of 10 seconds. These settings may require adjustment to conform to local water conditions. Typically, a 1 to 3 hour interval between backwashes is recommended.

## Spin Klin – System Maintenance

### Monthly Maintenance

**Check inlet /outlet pressures:**

In case the pressure differential is above 5 m / 7 PSI.

Activate automatic backwash of the Spin Klin filter battery.

In the event that the pressure differential remains high check for possible failures.

**Check for leakages from the drain manifold:**

In case there is a leakage of water during the filtration stage, check for possible failure at the backwash valve seals.

**Backwash controller performance:**

Check that the controller timing parameters are correctly adjusted and activate automatic backwash cycle. In the event of possible failure at the backwash controller, check for possible failures.

**Cleaning of the Command Filter:**

Close the command filter inlet valve, release the pressure trapped at the command filter, remove the cover. Thoroughly clean the filtration element and then reinstall the command filter element and cover, then open the inlet valve.

**Winterization:**

In order to prevent the filter battery becoming damaged during water freezing - drain all the water from the filter battery and the command filter and leave the drain valve open.

## Seasonal Maintenance – Cleaning the Discs

When manual cleaning of the discs is required, please follow the steps described below:

Make sure that system is not under pressure! Release the clamp and remove the cover. (Figure 1)
Unscrew the butterfly-nut on the filtration element. (Figure 2)
Remove the tightening cylinder. (Figure 3)

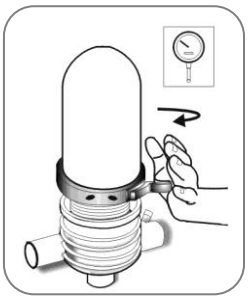
Figure 1

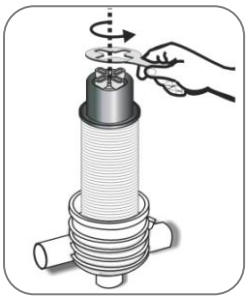
Figure 2

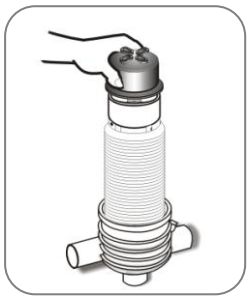
Figure 3

Remove the discs (for convenience we recommend using a plastic bag). (Figure 4, 5)
Tie each set on a string and place them in a cleaning solutions (HCL, Chlorine, or other) refer to **"Cleaning Recommendations Clogged Filtration Discs".**
Thoroughly wash the discs with fresh water and then reassemble the discs on the spines. (Figure 6)

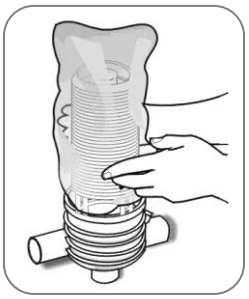
Figure 4

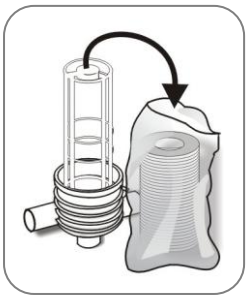
Figure 5

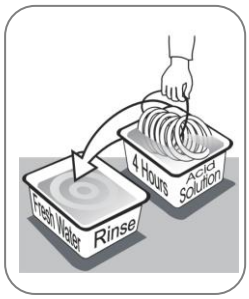

Figure 6

Check that the correct quantities of discs are assembled on the spine: when the discs are pressed with two hands, the top disc should be level with the imprinted circle on the outside of the spine. (Figure 7)
Put on the tightening cylinder and tighten the butterfly-nut, (Figure 8,9)

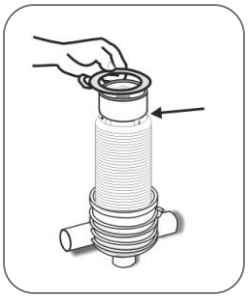
Figure 7

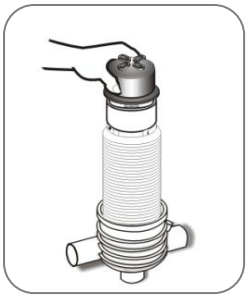
Figure 8

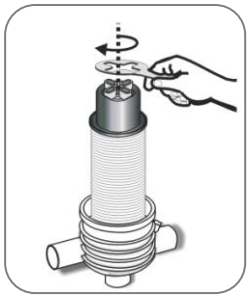
Figure 9

Reassemble the filter cover and tighten the clamp. (Figure 10, 11)

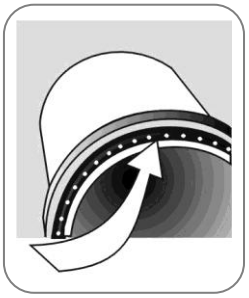
Figure 10

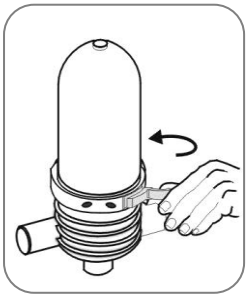
Figure 11

## Cleaning Recommendations for Clogged Filtration Discs

Water-formed deposits may cause clogging of the filter discs. The formation of these deposits depends on the quality of the filtered water and environmental conditions like temperature, pH, light, duration of filtration and more.

### Common water-formed deposits are:

- Biological or organic deposits (mostly mucous or oily to the touch, beige, brown or green in color)
- Iron oxide (rust) or other metal oxides
- Carbonates (white or gray deposit)
- Combinations of the above

If these deposits cannot be eliminated by pretreatment of the water, we recommend the following cleaning procedure:

## Material and Equipment

- A well ventilated working place.
- 2 small containers (1 liter), 2 large containers (15 liter) and a stirring stick, all resistant to chemicals, preferably of polypropylene.
- Plastic rope to tie up the disc.
- Sodium Hypochlorite NaOCl -
  Strong oxidizing liquid, commercial concentration: 10%.
  Oxidizes and removes organic and biological deposits.
- Hydrochloric Acid HCl -
  Very corrosive liquid, commercial concentration: 30%.
  Dissolves and removes carbonates, iron oxide, and other deposits.
- Safety equipment: safety glasses, gloves, long pants, long sleeved shirt and shoes.

**ATTENTION!**

While working with chemicals protect yourself with the necessary safety equipment:

- Safety glasses, gloves, protective clothing
- Work in a well ventilated area
- Follow the manufacturer's instructions

## Cleaning Organic and Biological Deposits

- Open the filter and remove dirty discs.

  **Attention –** Never open the filter before the pressure has been released.
- Arrange the discs loosely on the plastic rope
- Prepare a 5% Sodium Hypochlorite solution:

  1) Pour 5 liters of water into one of the large containers.

  2) Add 5 liters of Sodium Hypochlorite (10%) into the water.
- Soak the discs in the solution so that both sides are covered. To achieve maximum cleaning, agitate the discs several times with a stirring stick.
- Contact time with cleaning solution: up to 8 hours
- Remove the discs carefully from the solution, put them in the second large container and rinse them very well with clean water before placing them back in the filter.
- We recommend flushing the cleaned discs again in the filter to ensure that all chemical residues are removed.

The cleaning solution can be used for several sets of discs. As the cleaning activity of the solution deteriorates, it may be necessary to soak the discs for a longer time.

## Cleaning Carbonates and Iron Deposits

- Open the filter and remove the dirty discs.
- Arrange the discs loosely on the plastic rope.
- Prepare a 5% Solution of Hydrochloric Acid:

  1) Pour 10 liters of water into one of the large containers.

  2) Carefully add 2 liters of Hydrochloric Acid (30%) into the water.

  Soak the discs in the solution so that both sides will be covered.

  **PLEASE NOTE: Carbonates react violently with hydrochloric acid (foaming, gas evolution).**

  To achieve maximum cleaning, agitate the discs several times with a stirring stick.
- Contact time with cleaning solution: 1 - 8 hours.
- Remove the discs carefully from the solution and rinse them well with clean water before placing them back in the filter.
- We recommend flushing the cleaned discs again in the filter to ensure that all chemical residues are removed.

The cleaning solution can be used for several sets of discs. It may be necessary to soak the discs for a longer period of time as the cleaning activity of the solution deteriorates.

## Cleaning Complex Deposits

**If the composition of the deposit is not known, perform the following test:**

- Take 5 discs for the test.
- Soak 2 discs in a 5% Sodium Hypochlorite Solution.
  Preparation of the solution:
  Pour 1 cup of water into a small container, then add 1 cup of Sodium Hypochlorite
  (10% NaOCl).
- Soak 2 discs in a 5% Hydrochloric Acid Solution.
  Preparation of the solution:
  Pour 2½ cups (= 500ml) of water into a small container, then add carefully
  ½ cup (= 100ml) of Hydrochloric Acid (30% HCl).
- Keep one disc as a control.
- Observe the cleaning process:
  - If one of the solutions removes all of the deposit, clean the discs in that solution according to the instructions above.
  - If neither solution removes the deposit completely, continue with the test procedure.
- Remove the discs from both solutions, rinse them well with water and soak them in the second solution: put the two discs, which have been in the Sodium Hypochlorite Solution, in the Hydrochloric Acid Solution, and the other way round.
- Check the cleaning process:
  - If one of the treatments removes all of the deposit, clean all of the discs following the same two-step procedure in the exact same order. Rinse the discs well between the two cleaning processes.
  - If the deposit hasn't been completely removed, send a set of <u>untreated</u> discs to the laboratory for further examination.

## Identifying Malfunctions in the 2” Spin Klin system

### No Backwash Operation

Check inlet and outlet pressures

↓

Check & clean command filter

↓

Check controller – manually operate the backwash cycle

- No command transfer
  - ↓ Check electrical source
    Replace battery if needed
- Functioning correctly
  - ↓ Check the valves
- Some commands do not function
  - ↓ Check electrical source
    Replace battery if needed
  - ↓ Check solenoid electrical connectors
    Repair or replace the solenoid

Check the valves

- Command not received
  - ↓ Check the water supply control tube
- Receives command
  - ↓ Remove the valve’s cover
    Check the diaphragm and the piston
    Replace if needed
  - ↓ Check & clean the drain manifold and pipe

**Contact your local distributor**

## Identifying Malfunctions in the 2” Spin Klin system

### Continuous or Non-stop Backwashing

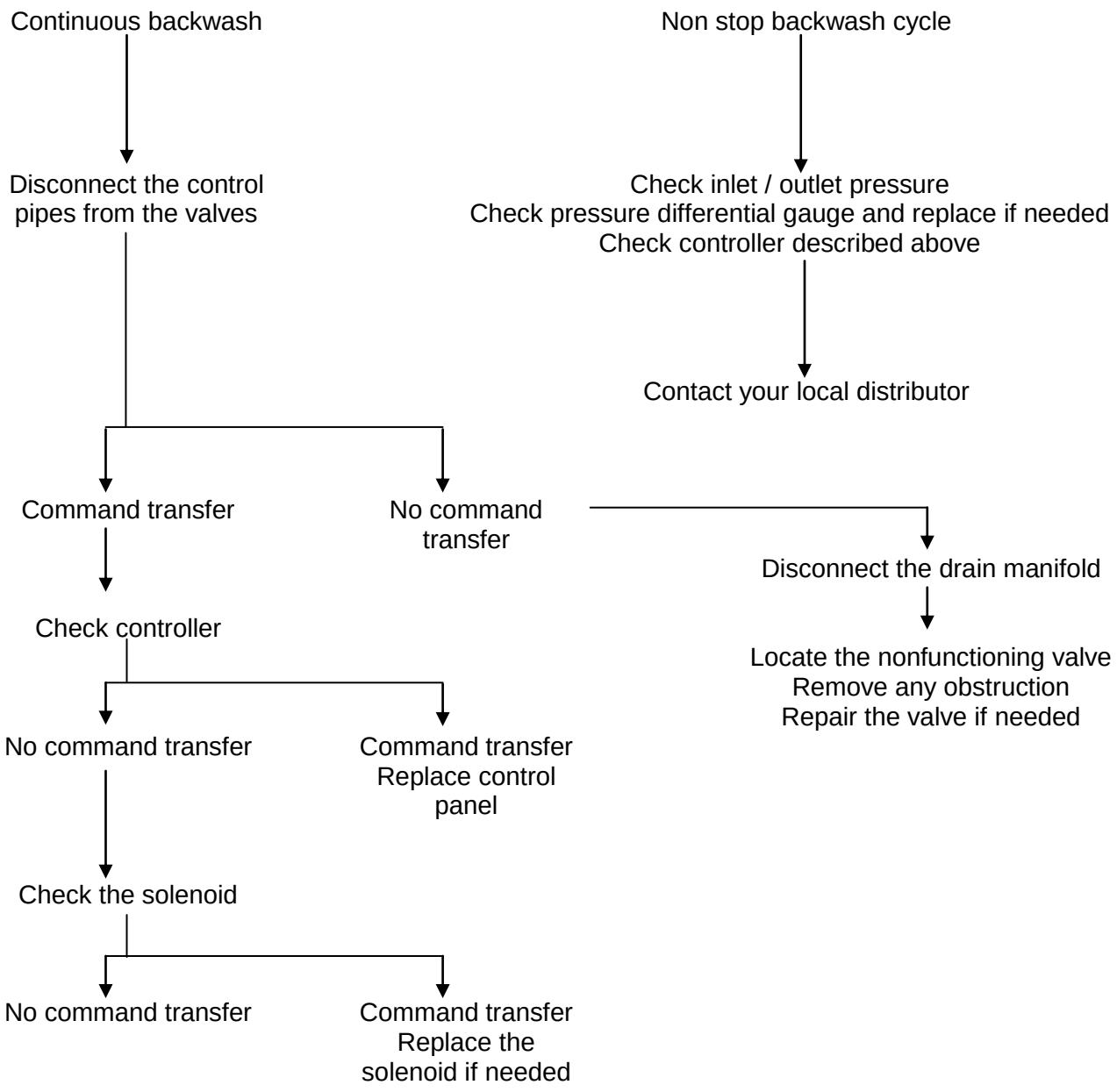


**Contact your local distributor**

# Limited Warranty

ARKAL FILTRATION SYSTEMS (“ARKAL FILTRATION SYSTEMS”) warrants to the original end user (“CUSTOMER”) who purchased ARKAL FILTRATION SYSTEMS products directly from Arkal or through one of its authorized distributors, that such products will be free from defect in material and/or workmanship for the term set forth below, provide that such products are properly installed, used and maintained in accordance with ARKAL FILTRATION SYSTEMS instructions, written or verbal.

Should such products prove defective within one year from the original purchase date by the customer, and subject to receipt by ARKAL FILTRATION SYSTEMS or its authorized representative, of written notice thereof from the customer within 30 days of discovery of such defect or failure - ARKAL FILTRATION SYSTEMS will repair or replace, at its sole discretion, any item proven to be defective.

ARKAL FILTRATION SYSTEMS shall not be liable, nor does this warranty extend to any consequential or incidental damages or expenses of any kind or nature, regardless of the nature thereof, including without limitation, injury to persons or property, loss of use of the products, loss of goodwill, loss of profits or any other contingent liabilities of any kind or character alleged to be the cause of loss or damage to the purchaser.

This warranty does not cover damage or failure caused by misuse, abuse or negligence, nor shall it apply to such products upon which repairs or alterations have been made by other than an authorized ARKAL FILTRATION SYSTEMS representative.

This warranty does not extend to components, parts or raw materials used by ARKAL FILTRATION SYSTEMS but manufactured by others, which shall be only to the extent warranted by the manufacturer's warranty.

No agents or representatives shall have the authority to alter the terms of this warranty nor to add any provisions to it not contained herein or to extend this warranty to anyone other than ARKAL FILTRATION SYSTEMS customers.

THERE ARE NO WARRANTIES, EXPRESS OR IMPLIED, EXCEPT THIS WARRANTY WHICH IS GIVEN IN LIEU OF ANY OTHER WARRANTIES, EXPRESS OR IMPLIED, INCLUDING ANY IMPLIED WARRANTY OF MERCHANTABILITY AND FITNESS FOR A PARTICULAR PURPOSE.